BPW AGRICULTURAL PROGRAMME:

QUALITY

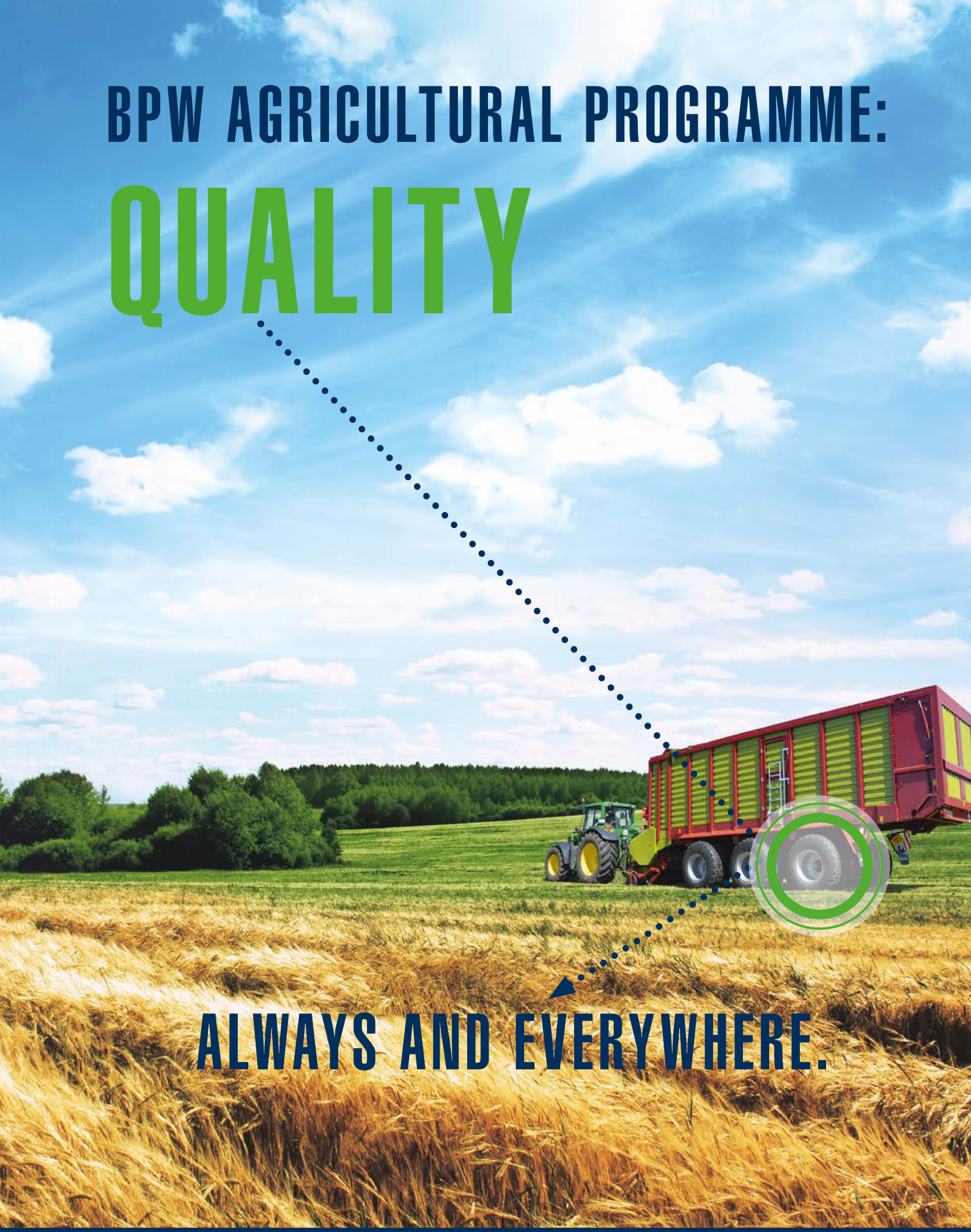

ALWAYS AND EVERYWHERE.

BPW · THE QUALITY FACTOR

BPW: PARTNER FÜR

AGRI-CULTURE.

CONTENTS

BPW · THE QUALITY FACTOR	
BPW-Hungária Kft.	4
Surface finishing	6
Axle beams	8
Camber and toe-in	10
Offset	11
Product portfolio	12
Type designations, code number keys	14
AXLES	
Axle stubs	16
Trailed axles	17
Braked axles (solid axle beam)	18
Braked axles (hollow axle beam)	22
Braked axles (for 80 km/h)	25
Axles with reversing mechanism	26
Overrun braking systems	28
Drawbar assemblies	33
Steering axles	34
SUSPENSION UNITS	
Hydro-pneumatic suspension units	42
Control of hydro-pneumatic suspension units	44
Air suspension units	46
Tandem axle suspension units	50
Spring suspension units	54
Pendle axle units	58
Complete running gear systems	60
Customer-specific solutions	62
TECHNOLOGY & SERVICE	
ECO Air tank	64
TControl	65
Accessories	66
Certificates and test reports	68
Brake cylinders	70
ABS	72
ECO Master slack adjuster	73
Air bags	74
Axle lift devices	76
Spare parts	77
Engineering	78
Seminars	79
Technical Distribution	79
Service network	80
BPW Worldwide	81

THIS IS OUR DEFINITION OF QUALITY.

INNOVATION, PRECISION, SUSTAINABILITY.

BPW-Hungária Kft. is a wholly owned subsidiary of the BPW Group. Since 1995, running gears for agricultural vehicles and machines have been manufactured in Szombathely – 100 km to the east from Graz.

BPW-Hungária Kft., Szombathely

The product portfolio ranges from 2 t trailed axle stubs and single axles through to the complete tri-axle running gear with frame, incl. suspension and installed brake system with an axle load above 30 t.

Around 1,300 employees are engaged in the manufacture of axles and running gear systems that meet the highest quality and technical standards.

There are 26 engineers whose task is to ensure further development of the existing running gears and to develop the new, practice- and customer-oriented solutions for the agricultural sector.

New developments and running series are examined on test benches and in driving tests. This ensures a consistently high quality level.

BPW-Hungária Kft. is certified according to ISO 9001:2008. This certification covers design and manufacture of agricultural axles, axle accessories, brake components, axle units, drawbars and overrun hitches. Furthermore, BPW was the first company in the sector to introduce certified environmental management system – ISO 14001:2005.

Junior staff development has always been the highest priority for BPW. BPW-Hungária‘s technical training centre is the central place of vocational training for more than 40 trainees and 50 pupils and students.

THINGS YOU CAN COUNT ON.

THE SURFACE PROTECTION FROM BPW.

Running gears from BPW offer robust technology for a long vehicle service life. An important quality feature of our products is cataphoretic dip-coating with zinc-phosphating (KTL_{Zn}), a special surface finish that provides 5 times more effective corrosion protection than the conventional painting processes. From axle to the complete suspension with frame, all products from BPW receive a series KTL-coating.

OPTIMUM FINISH FROM THE VERY START.

During the cataphoretic dip-coating, the KTL-coating pigments (positive charge) deposit on the electrically conducting components (negative charge) with a uniform thickness. Subsequently this layer is burnt in.

Result: extensive corrosion protection, even without topcoat finish.

BPW computer-controlled KTL_{Zn} system meets the high-tech standards achieved in the application of corrosion protection in car production and sets the global standards for coating quality in trailer chassis.

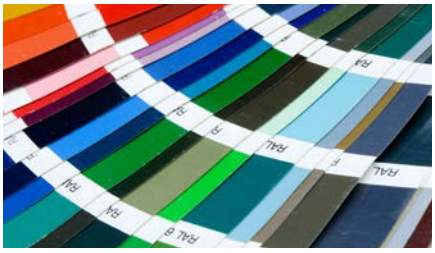

BPW colour creation system enables additional special finishes for series production in company colours.

BPW surface finishing – your benefits at a glance

- Extensive corrosion protection, even in inaccessible places such as cavities (5 times better than conventional primers with topcoat finish)
- Minimum rust creepage, e.g. after surface damage by stone or chipping strikes
- High chemical resistance, e.g. when high-pressure cleaners are used with detergent additives
- Long service life for the entire BPW chassis
- Outstanding appearance: surfaces without drips or runs and with an even coat thickness
- No further topcoat required. Individual gloss finish and colour requirements can be fulfilled by additional coating with cost-effective topcoat systems without pretreatment
- High surface harness: less transport and assembly damage
- Easy maintenance and repair
- Reduced downtime
- High heat resistance
- Eco-friendly coating process: no release of environmental pollutants

BPW AXLE BEAM.
SQUARE, RELIABLE, STABLE.

BPW axle beams have been square from the very beginning. And for good reason. They offer extreme stability and highest reliability. This is BPW's design principle which has proven itself in millions of applications. In combination with our brakes and suspension systems, the square axle beam provides a stable basis for a long vehicle service life. Along with the well-tried solid axle beams, BPW has also been manufacturing hollow axle beams for decades.

BPW axle beam for drum brakes

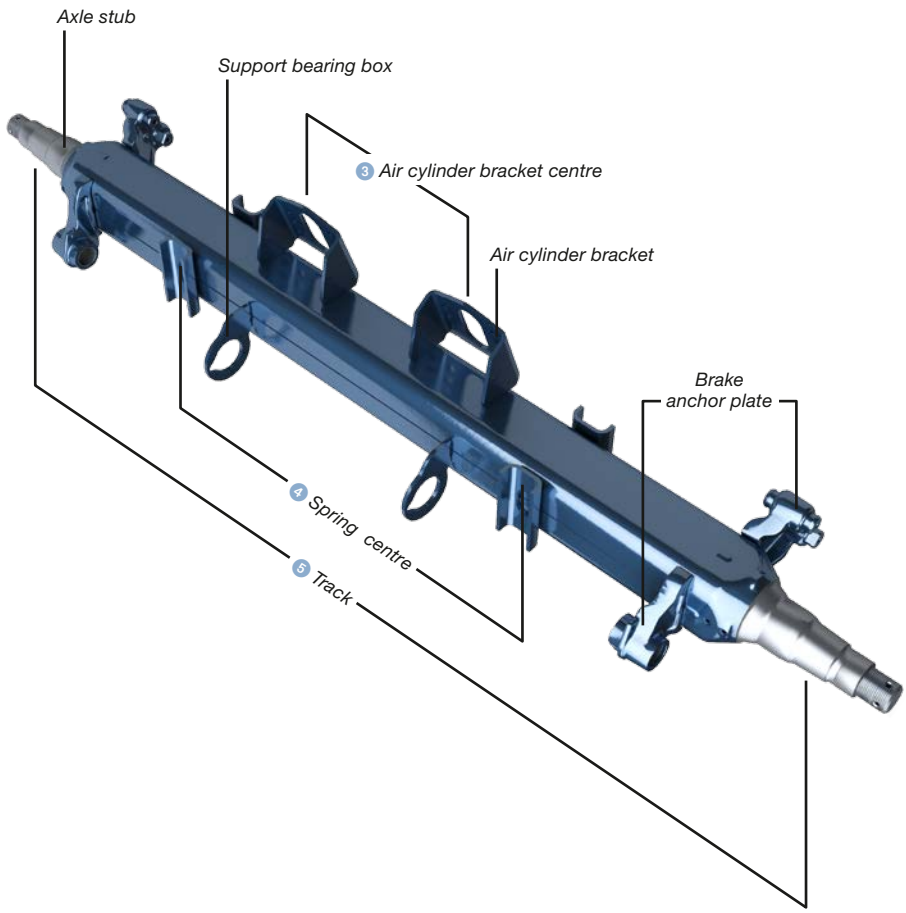

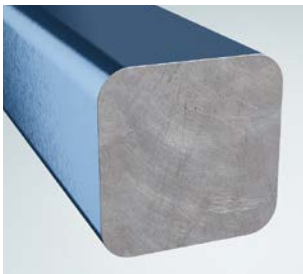

Solid axle beam

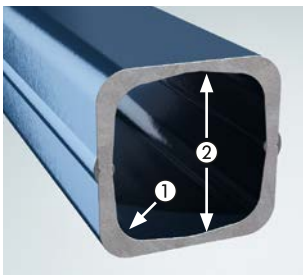

Hollow axle beam

BPW's square hollow axle beam (used in axles GS11008/10 and GS12010/14010) consists of two specially rolled, high-quality half axle tubes (U-profiles), which are welded together both internally and externally. The special feature of the BPW standard axle tube is its profile shape. More material at the corner radii 1 and less material in the upper and lower areas 2 ensure the maximum service life of this shape.

As a result, axle cross sections are reinforced at the points where the load is applied and are optimally shaped to cope with the load. BPW axle tubes are available with various axle cross-sections and wall thicknesses to suit individual axle loads and operating conditions. The forged BPW axle stubs are quenched and tempered and have two stepped bearing seats.

Axle stubs and tubes are welded.

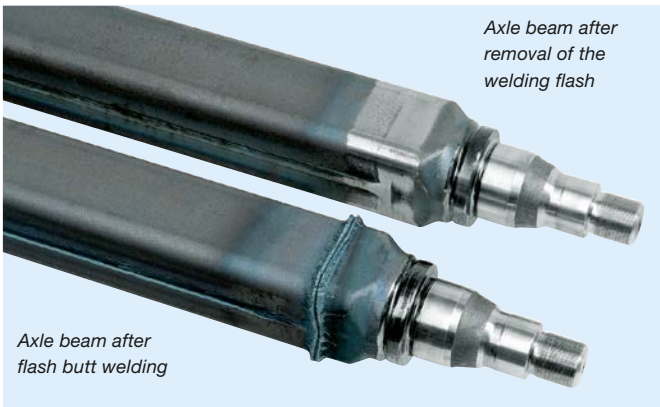

Axle beam after removal of the welding flash

Axle beam after flash butt welding

Axle stubs and axle tube are butt-welded together to produce one piece – the BPW axle beam. In this welding process, the axle tube and the ends of axle stubs are heated up to welding temperature by an electric current applied at their joining faces, whilst at the same time being forced together. This produces an absolutely homogenous connection without notch effect. In contrast to the conventional welding processes, no filter metals are needed. At the same time, the axle beam is given its camber and toe-in. Then the appropriate brake components are welded onto the BPW axle beams.

The most important technical data for the axle are the axle load, the brake version, the track 5 (SP), the spring centre 4 (FM) and the air cylinder bracket centre 3 (GM). The spring centre, for example, is the centre distance between the two spring pads and usually corresponds to the width of the trailer frame.

BPW axle beams – your benefits at a glance

- The square axle beam is optimally adapted to the total forces arising, such as bending and torsional loads
- Hollow axle beams with low inherent weight and excellent rigidity for high payloads
- Joining the quenched and tempered axle stubs to the square axle beam using the flash butt-welding process ensures a uniquely strong connection as well as the longest possible service life
- BPW hollow axle beams are equipped as standard for the retrofitting of ABS
- Even tyre wear because the axle beam has a positive camber and a narrow toe-in tolerance
- Easy installation/removal of the wheel hub thanks to stepped bearing seats on the axle stub
- Long-lasting corrosion protection by means of cataphoretic dip-coating with zinc-phosphating (KTL_{Zn})

More information: Surface finishing page 6-7 · Camber and toe-in, page 10

CAMBER AND TOE-IN.

FOR BPW, IT'S PURELY A QUESTION OF ADJUSTMENT.

Both the camber and toe-in of each BPW axle beam are set at the factory. These are minor values which have a big effect when driving. This is because the camber and toe-in protect tyres and provide more driving safety and efficiency.

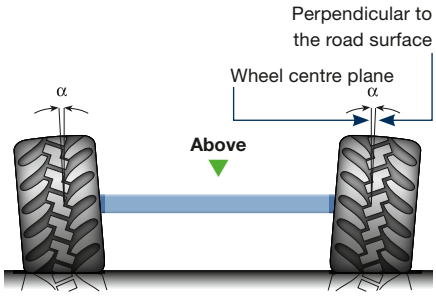

Positive camber – unladen vehicle
Camber is defined as the angle (α) between the wheel centre plane and a line drawn perpendicular to the road surface. The camber is positive if the top of the wheel is angled outwards when the axle is unladen.

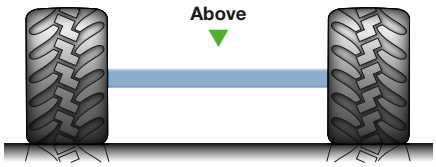

Positive camber – laden vehicle
The flexural load on the axle beam when the vehicle is laden causes the wheel to straighten. This means the tyre rolls with optimum road contact when the vehicle is laden, the most critical condition in terms of tyre wear. This avoids uneven, premature tyre wear.

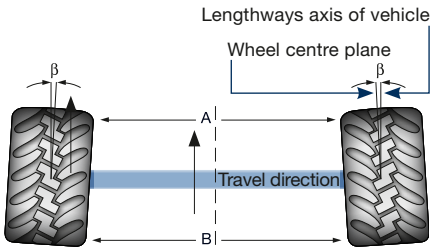

Toe-in
Toe-in is the angle (β), between the longitudinal axis of the vehicle and the wheel centre plane. Toe-in means the front part of the wheel is turned inwards towards the longitudinal axis of the vehicle – i.e. the distance between the front of the tyres (A) is less than the distance at the rear (B). When driving, the rolling resistance of the tyres causes the angle (β) to be reduced to zero, thereby guaranteeing good straight-line stability. Without toe-in, the wheels would attempt to run outwards.

Camber and toe-in – your benefits at a glance

- Setting a positive camber ensures maximum contact between the road and the tyres when the vehicle is laden, optimum tyre tracking and avoidance of uneven, premature tyre wear
- Precisely adjusted toe-in ensures good straight-ahead stability
- Lower operating costs and greater driving safety

OFFSET.

SUITABLE SOLUTION WITH AND WITHOUT OFFSET.

Offset (ET) of a wheel means the distance between the rim centre and the inner contact plane between the rim and the hub (or brake drum), measured in millimetres.

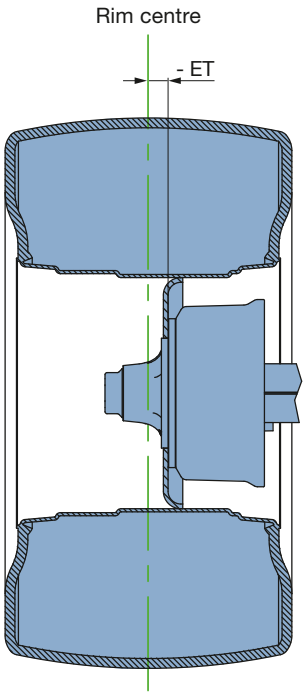

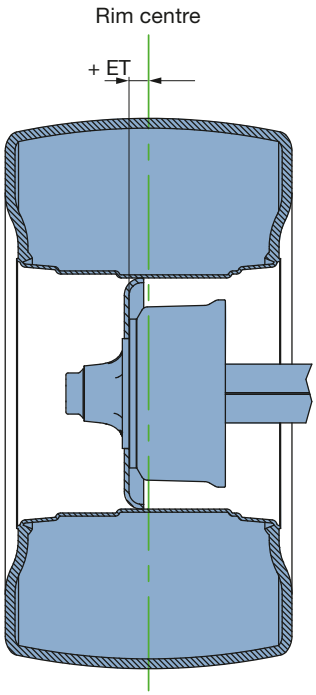

A zero offset means that the centre of tyre running surface is symmetric with respect to the mounting plane between the rim and the hub (or brake drum). A positive offset (e.g. + 25 mm) means that the contact plane is displaced outwards in respect to the rim centre. As a result, the track (SP) is reduced. A negative offset (e.g. - 25 mm) means that the contact plane (rim flange) is displaced inwards. As a result, the track is enlarged.

BPW agricultural axles are usually designed for the application of rims with a zero offset. Rims with offset (positive or negative) have a different wheel pressure line resulting in higher load on the respective wheel bearing (positive offset – inner bearing, negative offset – outer bearing). In certain circumstances this may reduce axle load.

Rims with offset should be applied only upon consultation with BPW

BPW AXLES AND RUNNING GEAR SYSTEMS.

EVERYTHING FROM BPW HAS A SYSTEM.

A good running gear is more than just the sum of its parts. All components must interact in an optimal manner to achieve the desired performance and economy. Good to know that BPW always has a suitable solution for you – individually adjusted to the respective vehicle type and purpose.

As system provider, we offer running gear systems for all types of trailers and semi-trailers. In addition, our modular design principle makes the most versatile combinations of running gear components possible. It goes without saying that the usual BPW quality and the excellent price-performance ratio is provided in all cases.

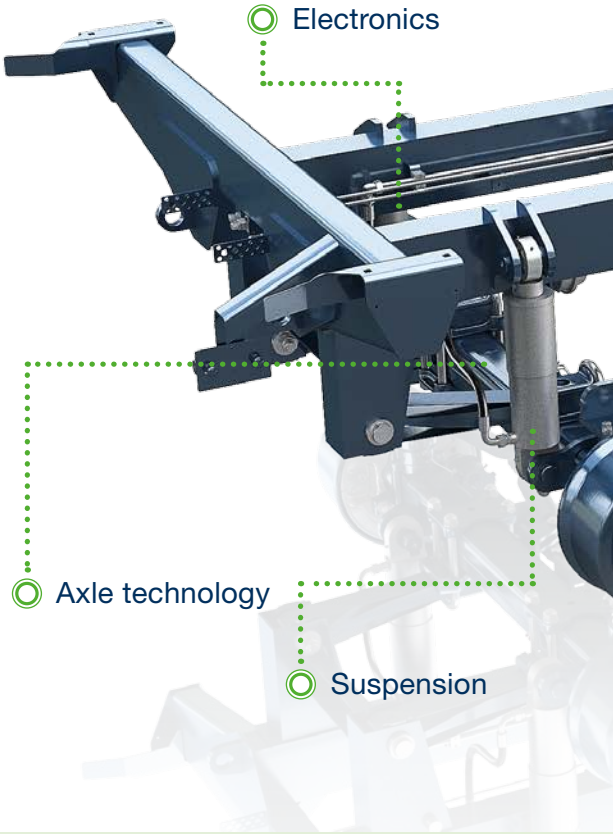

BPW braking axle with solid axle beam
(page 18)

BPW braking axle with hollow axle beam
(page 22)

BPW steering axle
(page 34)

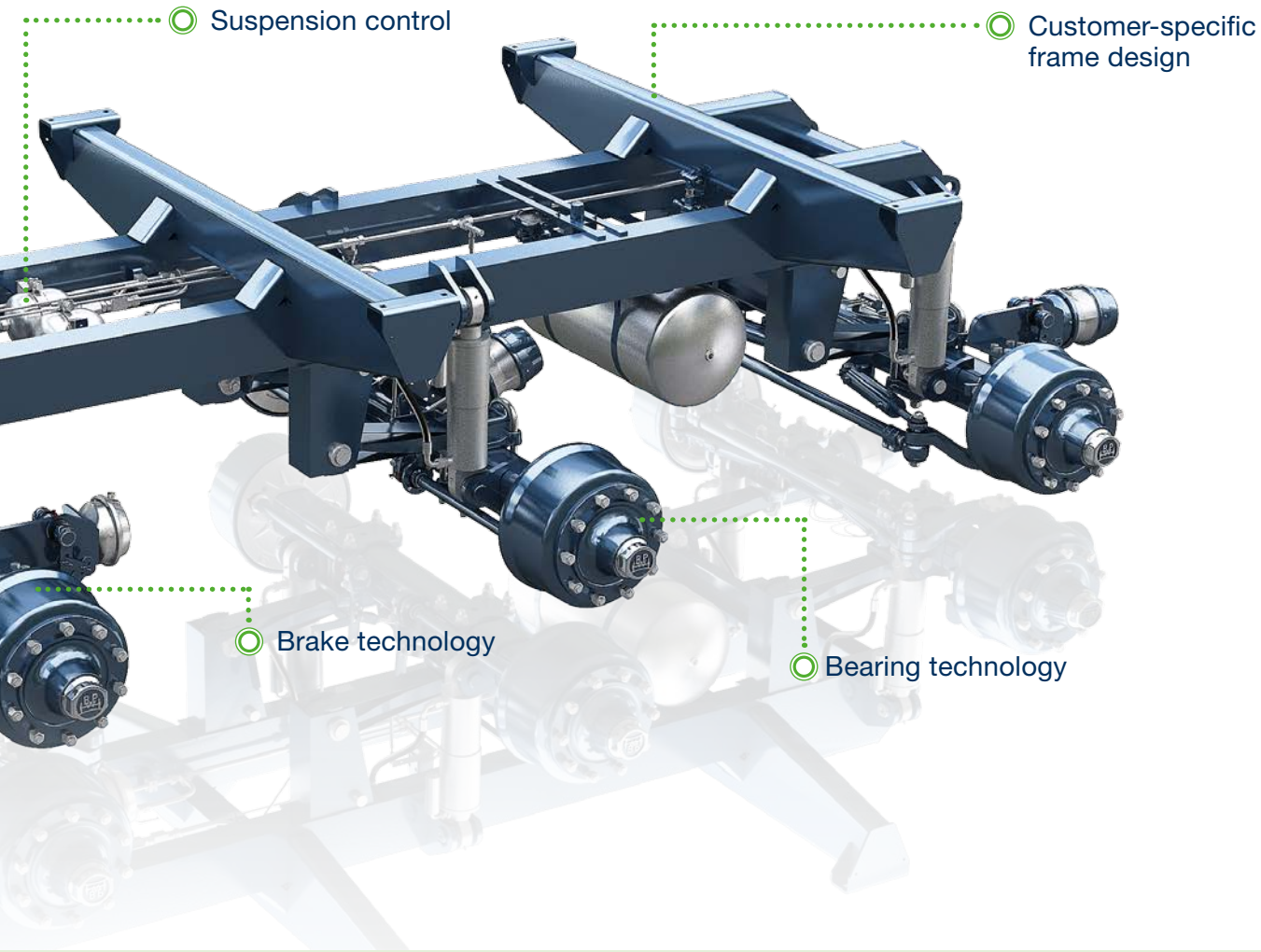

BPW hydro-pneumatic running gears
(page 42)

BPW air suspension units
(page 46)

BPW tandem axle suspension units
(page 50)

BPW TYPE DESIGNATIONS. RELEVANT MARKING AT A GLANCE.

Every BPW axle has a type plate. It is affixed to the centre of the axle beam – opposite to the travel direction. Data on the type plate can be used to define the required wear parts or – after an accident, for instance – the entire axle.

The BPW type designation (see axle type) consists of a letter group and a number group. The letter group identifies the type of the axle and suspension version and defines the hub version. The number group specifies the axle load on the ground in kilograms and the number of wheel studs per wheel hub.

All BPW components have a 10-digit code number.

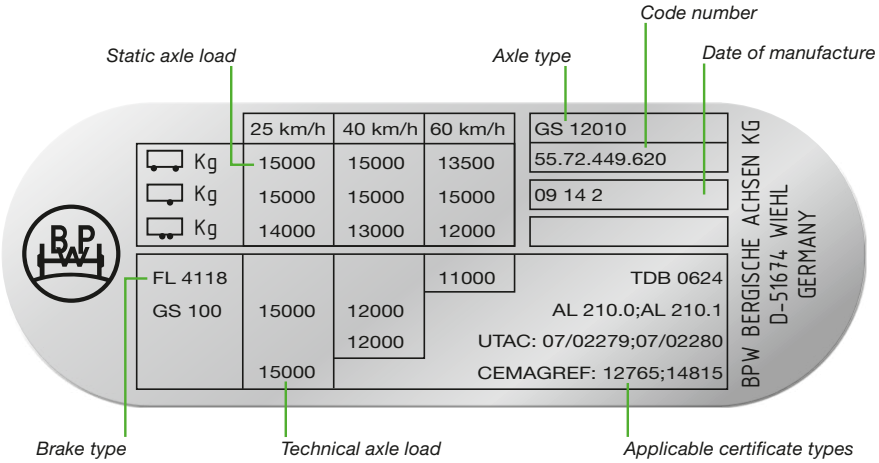

Type designation, suspension units: Example

GS	BW		:2/	12010	-1	
GS						GS axle (without offset)
GSN						GS axle (without offset) for 80 km/h
GSST						GS axle stub (agricultural) max. 40 km/h (without offset)
	SLO					Air suspension, straight trailing arms fitted on top of the axle (max. 14 t)
	SLU					Air suspension, straight trailing arms fitted below the axle (max. 14 t)
	VB					Spring suspension
	BW					Tandem axle suspension
	P					Pendle axle or pendle axle stub
	OH					With hydro-pneumatic suspension
		R				With frame
		LA				Unit steering axle, type LA
		LL				Unit steering axle, type LL
		L				Steering axle, type L (positive steering)
		LS				Trailer axle stub
			:2/			Tandem axle suspension
			:3/			Tri-axle suspension
				5506–14010		Axle load (in kg) and the number of wheel studs per wheel (last two digits)
					-1	Bearing type number
					V	Spring suspensions with torque arm

Type designation, axles: Example

G	S		LA	11010	-1	
G						BPW trailer axle for agricultural vehicles
	S					Single wheels, wheels without offset
		N				Braking axle for 80 km/h
		ST				Axle stub
			LA			Unit steering axle, type LA
			LL			Unit steering axle, type LL
			L			Steering axle, type L (positive steering)
				11010		Axle load and number of wheel studs per wheel (last two digits)
					-1	Bearing type number

Code number key, suspension units: Example

56.	88.	01.	0064	
56.				Agricultural suspension units
	63.			GS 5506; GS 5508; bearing: 32207 - 32013x
	67.			GS 7006, GS 7008; bearing: 32211-30214
	70.			GS 8008-3, GS 8010-3; bearing: 32213-32215
	72.			GS 12010 / GSN 12010; bearing: 33213 - 33118
	74.			GS 14010; bearing: 32219-33215
	88.			GS 11008-1, GS 11010-1; bearing: 32310A - 33116
		01.		Air-sprung axle (single axle)
		02.		Air suspension (tandem and tri-axle suspension with frame)
		03.		Spring suspension (single axle)
		04.		Spring suspension (tandem and tri-axle suspension, optionally with frame)
		05.		Tandem axle suspension (bogie suspension, optionally with frame)
		06.		Pendle axle unit
		07.		Special suspension
		08.		Hydro-pneumatic suspension (single module, tandem and tri-axle suspension, optionally with frame)
			0001...9999	Serial number

Code number key, axles: Example

55.	88.	460.	600	
26. or 36.				Agricultural trailer axle, steered
55.				Agricultural trailer axle, braked and unbraked
58.				Agricultural axle stub, braked and unbraked
	56.			GS 4006; bearing: 32207-30210
	63.			GS 5506, GS 5508; bearing: 32207 - 32013x
	67.			GS 7006, GS 7008; bearing: 30210 - 32014x
	70.			GS 8008-3, GS 8010-3; bearing: 32213 - 32215
	72.			GS 12010, GSN 12010; bearing: 33213-33118
	74.			GS 14010; bearing: 32219-33215
	88.			GS 11008-1; GS 11010-1; bearing: 32310A-33116,
		001.		Without brake
		356.		Wedge-type brake S 3008 RA (3081)
		381.		Wedge-type brake S 3006-7 RAZG
		443.		Cam brake N 3006-3
		454.		Cam brake N 3108-3
		449.		Wing cam brake FL 4118
		460.		Wing cam brake FL 4112
		461.		Cam brake N 4008-4
		744.		S-cam brake SN 4220
			001...999	Serial number

More information: Certificates and test reports, page 68-69

BPW BRAKED AND TRAILING AXLE STUB.

BPW axle stubs have the same product features as the complete BPW axles. At the same time, they offer greater flexibility for individual complex applications such as work machines or vehicles with excessively wide track.

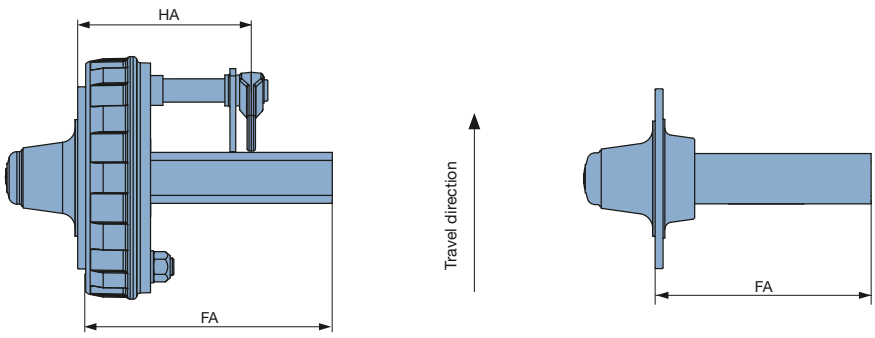

Axle cross-section (mm)	Axle type	FA (mm)	HA (mm)	Wheel brake	Wheel connection	Static axle load (kg) 25 km/h			40 km/h			BPW code number
Moving axle stub GS-ST without brake												
60	GS-ST 4006	300	–	–	6/205/160 M 18 x 1,5	4,500	3,800	–	4,200	3,500	–	58.56.001.600
70	GS-ST 5506	300	–	–	6/205/160 M 18 x 1,5	7,000	6,000	5,500	6,500	5,500	5,000	58.63.001.600
70	GS-ST 5508	300	–	–	8/220/275 M 20 x 1,5	7,000	6,000	5,500	6,500	5,500	5,000	58.63.001.601
80	GS-ST 7008	350	–	–	8/220/275 M 20 x 1,5	9,000	7,500	7,000	8,000	7,000	6,500	58.67.001.600
90	GS-ST 8008-3	350	–	–	8/220/275 M 20 x 1,5	11,000	9,500	8,500	10,000	8,500	8,000	58.70.001.600
90	GS-ST 8010-3	350	–	–	10/335/281 M 22 x 1,5	11,000	9,500	8,500	10,000	8,500	8,000	58.70.001.601
Brake axle stub GS-ST with cam brake and solid axle beam												
60	GS-ST 4006	350	238	N3006-3	6/205/160 M 18 x 1,5	4,500	3,800	–	4,200	3,500	–	58.56.443.600
70	GS-ST 5506	350	238	N3006-3	6/205/160 M 18 x 1,5	7,000	6,000	5,500	6,500	5,500	5,000	58.63.443.600
70	GS-ST 5506	350	238	N3108-3	6/205/160 M 18 x 1,5	7,000	6,000	5,500	6,500	5,500	5,000	58.63.454.600
80	GS-ST 7006	350	238	N3108-3	6/205/160 M 18 x 1,5	9,000	7,500	7,000	8,000	7,000	6,500	58.67.454.600
80	GS-ST 7008	350	238	N3108-3	8/220/275 M 20 x 1,5	9.000	7,500	7,000	8,000	7,000	6,500	58.67.454.601
90	GS-ST 8008-1	350	238	N3108-3	8/220/275 M 20 x 1,5	11,000	9,500	8,500	10,000	8,500	8,000	58.70.454.600
90	GS-ST 8008-3	350	238	N4008-4	8/220/275 M 20 x 1,5	11,000	9,500	8,500	10,000	8,500	8,000	58.70.461.600
Brake axle stub GS-ST with wing cam brake and hollow axle beam												
120 x 10	GS-ST 11010-1	600	358	FL 4112	10/335/280 M 22 x 1,5	11,000	11,000	11,000	9,500	9,500	9,500	58.88.460.600–601
120 x 10	GS-ST 11010-1	735	358	FL 4112	10/335/280 M 22 x 1,5	11,000	11,000	11,000	9,500	9,500	9,500	58.88.460.602–603
120 x 10	GS-ST 11010-1	810	358	FL 4112	10/335/280 M 22 x 1,5	11,000	11,000	11,000	9,500	9,500	9,500	58.88.460.604–605
120 x 15	GS-ST 12010	695	358	FL 4112	10/335/280 M 22 x 1,5	14,000	14,000	14,000	12,500	12,500	12,500	58.72.460.600–601
120 x 10	GS-ST 11010-1	590	388	FL 4118	10/335/280 M 22 x 1,5	11,000	11,000	11,000	9,500	9,500	9,500	58.88.449.600–601
120 x 15	GS-ST 11010-1	590	388	FL 4118	10/335/280 M 22 x 1,5	14,000	12,500	11,000	12,500	11,500	10,000	58.88.449.602–603
120 x 10	GS-ST 11010-1	650	388	FL 4118	10/335/280 M 22 x 1,5	11,000	11,000	11,000	9,500	9,500	9,500	58.88.449.604–605
120 x 15	GS-ST 11010-1	650	388	FL 4118	10/335/280 M 22 x 1,5	14,000	12,500	11,000	12,500	11,500	10,000	58.88.449.606–607
150 x 10	GS-ST 12010	490	388	FL 4118	10/335/280 M 22 x 1,5	15,000	15,000	14,000	15,000	15,000	13,000	58.72.449.600–601

BPW TRAILED AXLES WITH SOLID AND HOLLOW AXLE BEAM.

BPW trailed axles are manufactured based on the same quality standards as braked BPW axles. They are provided with camber to reduce tyre wear and provided with cataphoretic dip-coating with zinc-phosphating (KTL_{Zn}) as well. Additionally, BPW trailed axles with hollow axle beam are provided with a toe-in to improve their driving behaviour even further.

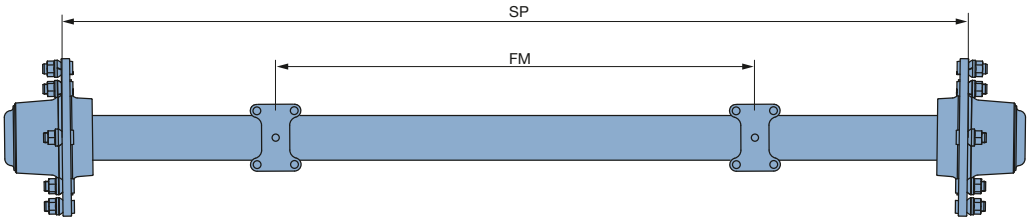

Axle cross-section (mm)	Track width SP (mm)	Air cylinder bracket centre GM (mm)	Spring centre FM (mm)	Wheel connection	Static axle load (kg)						BPW code number
					25 km/h			40 km/h			
Trailed axle GS 4006 with solid axle beam											
60	1,360	–	860	6/205/160 M 18 x 1,5	4,500	3,800	–	4,100	3,500	–	55.56.001.606
60	1,500	–	1,000	6/205/160 M 18 x 1,5	4,500	3,800	–	4,100	3,500	–	55.56.001.600
60	1,600	–	1,100	6/205/160 M 18 x 1,5	4,500	3,800	–	4,100	3,500	–	55.56.001.601
60	1,700	–	1,200	6/205/160 M 18 x 1,5	4,500	3,800	–	4,100	3,500	–	55.56.001.602
60	1,800	–	1,300	6/205/160 M 18 x 1,5	4,500	3,800	–	4,100	3,500	–	55.56.001.603
60	1,900	–	1,400	6/205/160 M 18 x 1,5	4,500	3,800	–	4,100	3,500	–	55.56.001.604
60	2,000	–	1,500	6/205/160 M 18 x 1,5	4,500	3,800	–	4,100	3,500	–	55.56.001.605
Trailed axle GS 5506 with solid axle beam											
70	1,360	–	860	6/205/160 M 18 x 1,5	7,000	6,000	5,500	6,500	5,500	5,000	55.63.001.602
70	1,500	–	1,000	6/205/160 M 18 x 1,5	7,000	6,000	5,500	6,500	5,500	5,000	55.63.001.603
70	1,650	–	1,150	6/205/160 M 18 x 1,5	7,000	6,000	5,500	6,500	5,500	5,000	55.63.001.600
70	1,700	–	1,200	6/205/160 M 18 x 1,5	7,000	6,000	5,500	6,500	5,500	5,000	55.63.001.604
70	1,800	–	1,300	6/205/160 M 18 x 1,5	7,000	6,000	5,500	6,500	5,500	5,000	55.63.001.601
Trailed axle GS 7008 with solid axle beam											
80	1,700	–	1,100	8/220/275 M 20 x 1,5	9,000	7,500	7,000	8,000	7,000	6,500	55.67.001.601
80	1,800	–	1,200	8/220/275 M 20 x 1,5	9,000	7,500	7,000	8,000	7,000	6,500	55.67.001.600
80	1,850	–	1,250	8/220/275 M 20 x 1,5	9,000	7,500	7,000	8,000	7,000	6,500	55.67.001.602
Trailed axle GS 8008-3 with solid axle beam											
90	1,800	–	1,200	8/220/275 M 20 x 1,5	11,000	9,500	8,500	10,000	8,500	8,000	55.70.001.600
90	1,850	–	1,250	8/220/275 M 20 x 1,5	11,000	9,500	8,500	10,000	8,500	8,000	55.70.001.602
90	1,900	–	1,300	8/220/275 M 20 x 1,5	11,000	9,500	8,500	10,000	8,500	8,000	55.70.001.601
90	1,950	–	1,350	8/220/275 M 20 x 1,5	11,000	9,500	8,500	10,000	8,500	8,000	55.70.001.603
Trailed axle GS 11010 -1 with hollow axle beam with weld-on spring plates											
120 x 10	1,950	–	1,000	10/280/335 M 22 x 1,5	14,000	12,500	11,000	13,000	11,500	10,000	55.88.001.600
120 x 10	2,050	–	1,100	10/280/335 M 22 x 1,5	14,000	12,500	11,000	13,000	11,500	10,000	55.88.001.601
Trailed axle GS 12010 with hollow axle beam with weld-on spring plates											
150 x 10	1,900	–	1,100	10/280/335 M 22 x 1,5	15,000	15,000	14,000	15,000	15,000	13,000	55.72.001.600
150 x 10	2,050	–	1,250	10/280/335 M 22 x 1,5	15,000	15,000	14,000	15,000	15,000	13,000	55.72.001.601

Standard offset: ET 0 mm · Additional versions available on request.

BPW BRAKED AXLES WITH SOLID AXLE BEAM.

STRONG QUALITY FOR EVERY APPLICATION.

With a variety of the permissible axle loads (up to 8.5 t) and different wheel brakes designed for individual applications, BPW offers an extensive range of braked axles with solid axle beams. They are provided as standard with camber to reduce tyre wear. Like all BPW running gear products, solid axles are also provided with cataphoretic dip-coating with zinc-phosphating.

Your benefits at a glance:

- **Durable components due to special BPW geometry and material quality**
- **KTL_{Zn}-coating for optimum corrosion protection**
- **Axle with camber for reduced tyre wear**
- **Load-adapted square axle beam of 50 - 100 mm**
- **Brakes of 300 x 60 up to 400 x 80 mm, depending on application**
- **Axles equipped with slack adjuster (GSK) for easier brake adjustment (option)**
- **High-quality DIN-ISO roller bearings, available worldwide**

UP TO 8.5 t AXLE LOAD

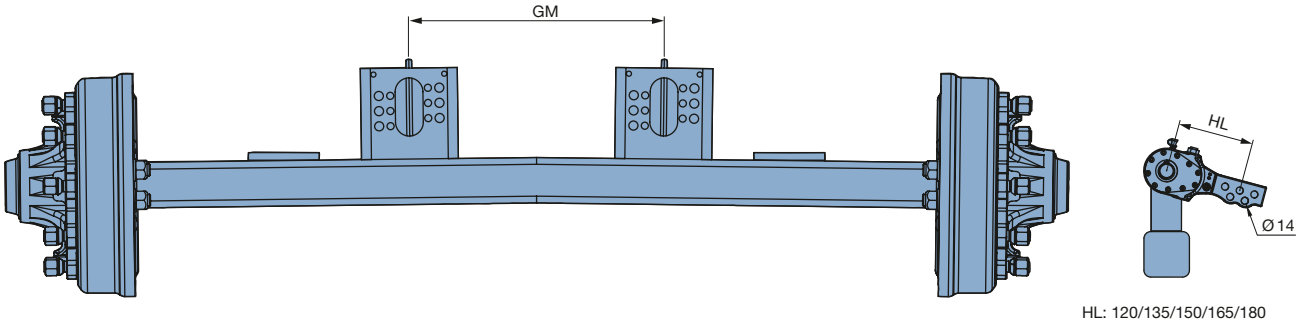

HL: 120/135/150/165/180

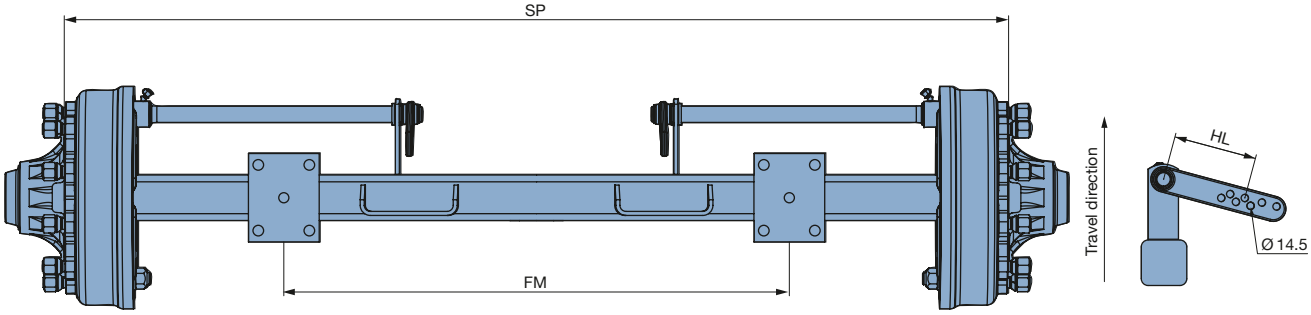

HL: 120/135/150/165/180/200

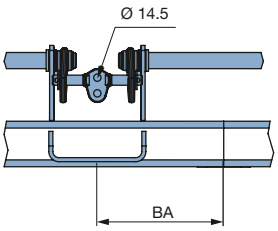

More information: Surface finishing, page 6-7 · Certificates and test reports, page 68-69 · ECO Master slack adjuster, page 73

BPW BRAKED AXLES WITH SOLID AXLE BEAM. STATIC AXLE LOADS UP TO 8.5 t (TANDEM).

Axle cross-section (mm)	Track width SP (mm)	Spring centre FM (mm)	Air cylinder bracket centre GM (mm)	Brake equalisation device	Static axle load (kg)						BPW code number
					25 km/h			40 km/h			
GS 4006 - axle load up to 4,000 kg (25 km/h)											
Brake N3006-3 - 300 x 60 mm - wheel connection 160/205/6 ET 0 - M18 x 1.5											
60	1,500	1,000		MV	4,500	3,800	–	4,100	3,500	–	55.56.443.601
60	1,700	1,200	576	without	4,500	3,800	–	4,100	3,500	–	55.56.443.604
60	1,700	1,200		MV	4,500	3,800	–	4,100	3,500	–	55.56.443.605
60	1,800	1,300	676	without	4,500	3,800	–	4,100	3,500	–	55.56.443.608
60	1,800	1,300		MV	4,500	3,800	–	4,100	3,500	–	55.56.443.609
GS 5506 - axle load up to 5,500 kg (25 km/h)											
Brake N3006-3 - 300 x 60 mm - wheel connection 160/205/6 ET 0 - M18 x 1.5											
70	1,360	860	232	without	7,000	6,000	5,500	6,500	5,500	5,000	55.63.443.609
70	1,500	1,000	372	without	7,000	6,000	5,500	6,500	5,500	5,000	55.63.443.600
70	1,500	1,000		MV	7,000	6,000	5,500	6,500	5,500	5,000	55.63.443.601
70	1,650	1,150	522	without	7,000	6,000	5,500	6,500	5,500	5,000	55.63.443.610
70	1,650	1,150		MV	7,000	6,000	5,500	6,500	5,500	5,000	55.63.443.615
70	1,700	1,200	572	without	7,000	6,000	5,500	6,500	5,500	5,000	55.63.443.604
70	1,700	1,200		MV	7,000	6,000	5,500	6,500	5,500	5,000	55.63.443.605
70	1,800	1,300	672	without	7,000	6,000	5,500	6,500	5,500	5,000	55.63.443.611
GS 5506 - axle load up to 5,500 kg (25 km/h)											
Brake N3108-3 - 310 x 80 mm - wheel connection 160/205/6 ET 0 - M18 x 1.5											
70	1,500	1,000	300	without	7,000	6,000	5,500	6,500	5,500	5,000	55.63.454.600
70	1,500	1,000		MV	7,000	6,000	5,500	6,500	5,500	5,000	55.63.454.601
70	1,700	1,200	500	without	7,000	6,000	5,500	6,500	5,500	5,000	55.63.454.604
70	1,700	1,200		MV	7,000	6,000	5,500	6,500	5,500	5,000	55.63.454.605
70	1,850	1,350	650	without	7,000	6,000	5,500	6,500	5,500	5,000	55.63.454.608
70	1,850	1,350		MV	7,000	6,000	5,500	6,500	5,500	5,000	55.63.454.609
GS 5508 - axle load up to 5,500 kg (25 km/h)											
Brake N3108-3 - 310 x 80 mm - wheel connection 220/275/8 ET 0 - M20 x 1.5											
70	1,500	1,000	300	without	7,000	6,000	5,500	6,500	5,500	5,000	55.63.454.612
70	1,500	1,000		MV	7,000	6,000	5,500	6,500	5,500	5,000	55.63.454.613
70	1,700	1,200	500	without	7,000	6,000	5,500	6,500	5,500	5,000	55.63.454.616
70	1,700	1,200		MV	7,000	6,000	5,500	6,500	5,500	5,000	55.63.454.617
70	1,850	1,350	650	without	7,000	6,000	5,500	6,500	5,500	5,000	55.63.454.620
70	1,850	1,350		MV	7,000	6,000	5,500	6,500	5,500	5,000	55.63.454.621
GS 7008 - axle load up to 7,000 kg (25 km/h)											
Brake N3108-3 - 310 x 80 mm - wheel connection 220/275/8 ET 0 - M20 x 1.5											
80	1,700	1,100	500	without	9,000	7,500	7,000	8,000	7,000	6,500	55.67.454.608
80	1,850	1,250	650	without	9,000	7,500	7,000	8,000	7,000	6,500	55.67.454.600
80	1,850	1,250		MV	9,000	7,500	7,000	8,000	7,000	6,500	55.67.454.601
80	1,950	1,350	750	without	9,000	7,500	7,000	8,000	7,000	6,500	55.67.454.604
80	1,950	1,350		MV	9,000	7,500	7,000	8,000	7,000	6,500	55.67.454.605
80	2,050	1,450	850	without	9,000	7,500	7,000	8,000	7,000	6,500	55.67.454.609

Weld-on air cylinder brackets are provided as standard.
Weld-on spring plates are provided as an option.

Axle cross-section (mm)	Track width SP (mm)	Spring centre FM (mm)	Air cylinder bracket centre GM (mm)	Brake equalisation device	Static axle load (kg)						BPW code number
					25 km/h			40 km/h			
GS 7008 - axle load up to 7,000 kg (25 km/h)											
Brake N4008-4 - 400 x 80 mm - wheel connection 220/275/8 ET 0 - M20 x 1.5											
80	1,800	1,200	450	without	9,000	7,500	7,000	8,000	7,000	6,500	55.67.461.600
80	1,800	1,200		MV	9,000	7,500	7,000	8,000	7,000	6,500	55.67.461.601
80	1,850	1,250	500	without	9,000	7,500	7,000	8,000	7,000	6,500	55.67.461.604
80	1,850	1,250		MV	9,000	7,500	7,000	8,000	7,000	6,500	55.67.461.605
80	2,000	1,400	650	without	9,000	7,500	7,000	8,000	7,000	6,500	55.67.461.608
80	2,000	1,400		MV	9,000	7,500	7,000	8,000	7,000	6,500	55.67.461.609
GS 8008-1 - axle load up to 8,500 kg (25 km/h)											
Brake N3108-3 - 310 x 80 mm - wheel connection 220/275/8 ET 0 - M20 x 1.5											
90	1,800	1,200	600	without	11,000	9,500	8,500	10,000	8,500	8,000	55.70.454.600
90	1,800	1,200		MV	11,000	9,500	8,500	10,000	8,500	8,000	55.70.454.601
90	1,950	1,350	750	without	11,000	9,500	8,500	10,000	8,500	8,000	55.70.454.604
90	1,950	1,350		MV	11,000	9,500	8,500	10,000	8,500	8,000	55.70.454.605
90	2,050	1,450	850	without	11,000	9,500	8,500	10,000	8,500	8,000	55.70.454.608
90	2,050	1,450		MV	11,000	9,500	8,500	10,000	8,500	8,000	55.70.454.609
GS 8008-33 - axle load up to 8,500 kg (25 km/h)											
Brake N4008-4 - 400 x 80 mm - wheel connection 220/275/8 ET 0 - M20 x 1.5											
90	1,850	1,250	500	without	11,000	9,500	8,500	10,000	8,500	8,000	55.70.461.600
90	1,850	1,250		MV	11,000	9,500	8,500	10,000	8,500	8,000	55.70.461.601
90	1,950	1,350	600	without	11,000	9,500	8,500	10,000	8,500	8,000	55.70.461.604
90	1,950	1,350		MV	11,000	9,500	8,500	10,000	8,500	8,000	55.70.461.605
90	2,000	1,400	650	without	11,000	9,500	8,500	10,000	8,500	8,000	55.70.461.608
90	2,000	1,400		MV	11,000	9,500	8,500	10,000	8,500	8,000	55.70.461.609
90	2,050	1,450	700	without	11,000	9,500	8,500	10,000	8,500	8,000	55.70.461.612
90	2,050	1,450		MV	11,000	9,500	8,500	10,000	8,500	8,000	55.70.461.613
GS 8010-3 - axle load up to 8,500 kg (25 km/h)											
Brake N4008-4 - 400 x 80 mm - wheel connection 220/275/8 ET 0 - M22 x 1.5											
90	1,850	1,250	500	without	11,000	9,500	8,500	10,000	8,500	8,000	55.70.461.616
90	1,850	1,250		MV	11,000	9,500	8,500	10,000	8,500	8,000	55.70.461.617
90	1,950	1,350	600	without	11,000	9,500	8,500	10,000	8,500	8,000	55.70.461.620
90	1,950	1,350		MV	11,000	9,500	8,500	10,000	8,500	8,000	55.70.461.621
90	2,000	1,400	650	without	11,000	9,500	8,500	10,000	8,500	8,000	55.70.461.624
90	2,000	1,400		MV	11,000	9,500	8,500	10,000	8,500	8,000	55.70.461.625
90	2,050	1,450	700	without	11,000	9,500	8,500	10,000	8,500	8,000	55.70.461.628
90	2,050	1,450		MV	11,000	9,500	8,500	10,000	8,500	8,000	55.70.461.629

Weld-on spring plates are provided as an option.
Brake equalisation device either at the front in the centre, at the front 250 mm to the left or at the front 250 mm to the right, as required.
Standard offset: ET 0 mm.
Additional versions available on request.
Optionally with weld-on spring plates.

More information: Certificates and test reports, page 68–69 · Brake cylinders, page 70-71

BPW BRAKED AXLES WITH HOLLOW AXLE BEAM.
CONFIDENT IN EVERY SITUATION.

Depending on the vehicle type and application, speeds of up to 80 km/h are possible. Engineered for static axle loads of up to 16 t (25 km/h) and provided with special brake camshaft bearing, BPW braked axles give you more confidence. The brake camshaft seat as well as all brake cylinder brackets are designed taking into consideration special vehicle requirements. Speeds higher than 62 km/h require AGS and ABS.

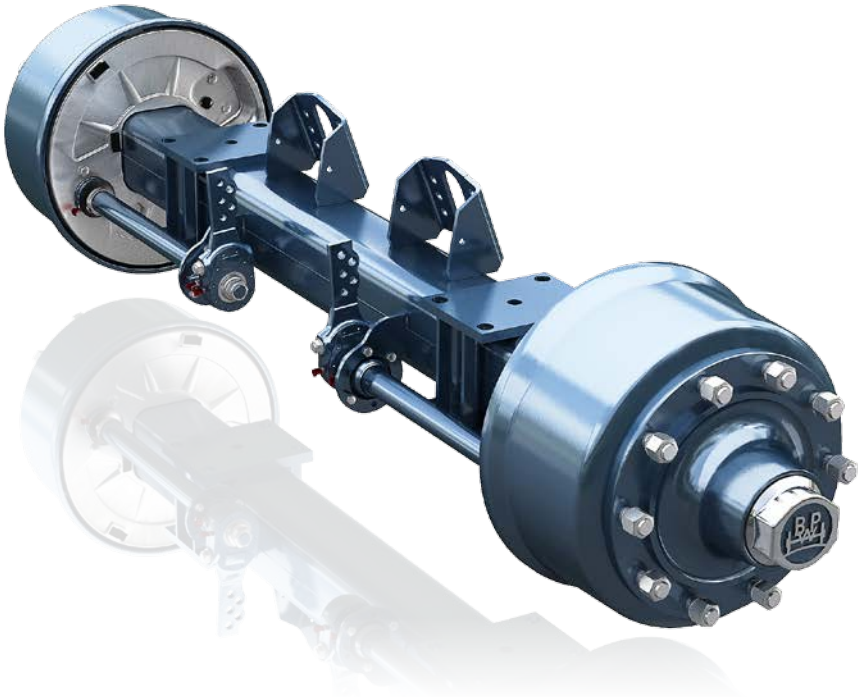

Your benefits at a glance:

- **Robust BPW design**
- **KTL_{Zn}-coating for optimum corrosion protection**
- **Durable components with high sustainability due to special BPW geometry and material quality**
- **Axles with camber and toe-in for better driving behaviour and reduced tyre wear**
- **Load-adapted hollow axle beams of 120 x 10 to 150 x 20 mm**
- **Quenched and tempered BPW axle stubs for maximum service life**
- **High-quality DIN-ISO tapered roller bearings, available worldwide**
- **Brake camshafts with DIN-splines (high brake torque transmission)**
- **Spherical bearing of brake camshaft for a more sensitive responding behaviour of brake**
- **Alternative brake cylinder positions possible**
- **Axle loads of up to 16 t**
- **Speeds of up to 65 km/h (GSN axle up to 80 km/h) with ABS and AGS (option) (can thus be used for driving on motorways)**
- **Preparation for tyre pressure control system (option)**
- **Central lubrication bar (option)**

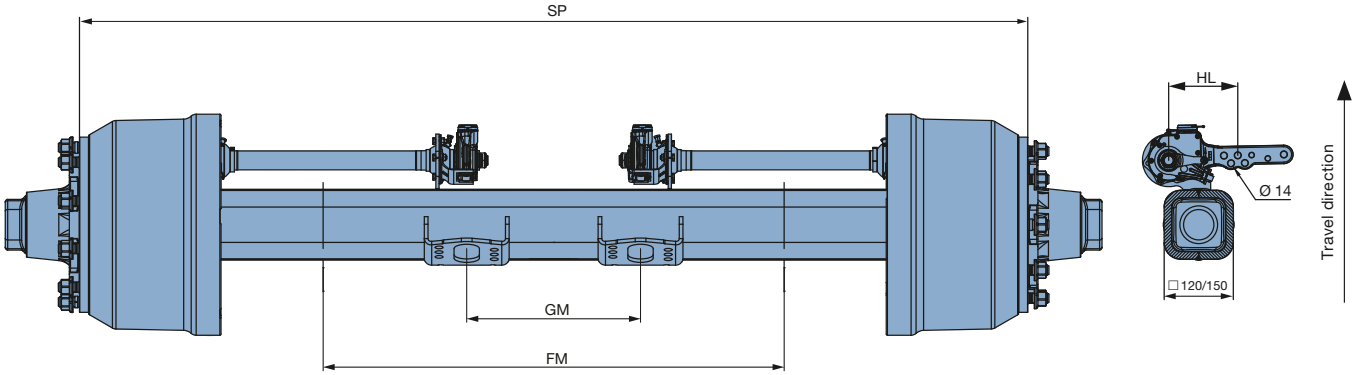

Axle cross section (mm)	Track width SP (mm)	Spring centre FM (mm)	Air cylinder bracket centre GM (mm)	Static axle load (kg)						BPW code number
				40 km/h			60 km/h			
				o	o o	o o	o	o o	o o	
GS 11008-1 - axle load up to 9,000 kg (40 km/h)										
Brake FL4112 410 x 120 mm - wheel connection 220/275/8 ET 0 - M22 x 1.5										
120 x 10	1,800	700	1,083	8,500	8,500	8,500	8,000	8,000	8,000	55.88.460.600
120 x 10	1,850	930	363	10,000	10,000	10,000	9,500	9,500	9,000	55.88.460.602
120 x 10	1,850	750	1,133	8,500	8,500	8,500	8,000	8,000	8,000	55.88.460.604
120 x 10	1,950	1,000	463	9,500	9,500	9,500	9,000	9,000	9,000	55.88.460.606
120 x 10	1,950	850	1,233	8,500	8,500	8,500	8,000	8,000	8,000	55.88.460.608
120 x 10	2,000	1,050	513	9,500	9,500	9,500	9,000	9,000	9,000	55.88.460.610
120 x 10	2,000	900	1,283	8,500	8,500	8,500	8,000	8,000	8,000	55.88.460.612
120 x 10	2,050	1,100	563	9,500	9,500	9,500	9,000	9,000	9,000	55.88.460.614
120 x 10	2,050	950	1,333	8,500	8,500	8,500	8,000	8,000	8,000	55.88.460.616
120 x 10	2,150	1,200	663	9,500	9,500	9,500	9,000	9,000	9,000	55.88.460.618
120 x 10	2,150	1,050	1,433	8,500	8,500	8,500	8,000	8,000	8,000	55.88.460.620
GS 11008-1 - axle load up to 10,000 kg (40 km/h)										
Brake FL4112 410 x 120 mm – wheel connection 220/275/8 ET 0 - M22 x 1.5										
120 x 15	1,800	700	1,083	11,000	11,000	10,000	10,000	10,000	9,000	55.88.460.601
120 x 15	1,850	930	363	13,000	11,500	10,000	11,500	10,500	9,000	55.88.460.603
120 x 15	1,850	750	1,133	11,000	11,000	10,000	10,000	10,000	9,000	55.88.460.605
120 x 15	1,950	1,000	463	12,500	11,500	10,000	11,500	10,500	9,000	55.88.460.607
120 x 15	1,950	850	1,233	11,000	11,000	10,000	10,000	10,000	9,000	55.88.460.609
120 x 15	2,000	1,050	513	12,500	11,500	10,000	11,500	10,500	9,000	55.88.460.611
120 x 15	2,000	900	1,283	11,000	11,000	10,000	10,000	10,000	9,000	55.88.460.613
120 x 15	2,050	1,100	563	12,500	11,500	10,000	11,500	10,500	9,000	55.88.460.615
120 x 15	2,050	950	1,333	11,000	11,000	10,000	10,000	10,000	9,000	55.88.460.617
120 x 15	2,150	1,200	663	12,500	11,500	10,000	11,500	10,500	9,000	55.88.460.619
120 x 15	2,150	1,050	1,433	11,000	11,000	10,000	10,000	10,000	9,000	55.88.460.621
GS 11010-1 - axle load up to 9,000 kg (40 km/h)										
Brake FL4112 410 x 120 mm – wheel connection 280/335/10 ET 0 - M22 x 1.5										
120 x 10	1,800	700	1,083	8,500	8,500	8,500	8,000	8,000	8,000	55.88.460.622
120 x 10	1,850	930	363	10,000	10,000	10,000	9,500	9,500	9,000	55.88.460.624
120 x 10	1,850	750	1,133	8,500	8,500	8,500	8,000	8,000	8,000	55.88.460.626
120 x 10	1,950	1,000	463	9,500	9,500	9,500	9,000	9,000	9,000	55.88.460.628
120 x 10	1,950	850	1,233	8,500	8,500	8,500	8,000	8,000	8,000	55.88.460.630
120 x 10	2,000	1,050	513	9,500	9,500	9,500	9,000	9,000	9,000	55.88.460.632
120 x 10	2,000	900	1,283	8,500	8,500	8,500	8,000	8,000	8,000	55.88.460.634
120 x 10	2,050	1,100	563	9,500	9,500	9,500	9,000	9,000	9,000	55.88.460.636
120 x 10	2,050	950	1,333	8,500	8,500	8,500	8,000	8,000	8,000	55.88.460.638
120 x 10	2,150	1,200	663	9,500	9,500	9,500	9,000	9,000	9,000	55.88.460.640
120 x 10	2,150	1,050	1,433	8,500	8,500	8,500	8,000	8,000	8,000	55.88.460.642

BPW BRAKED AXLES WITH HOLLOW AXLE BEAM. STATIC AXLE LOADS OF UP TO 16 t (TANDEM).

Axle cross section (mm)	Track width SP (mm)	Spring centre FM (mm)	Air cylinder bracket centre GM (mm)	Static axle load (kg)						BPW code number
				40 km/h			60 km/h			
				O	O O	O O	O	O O	O O	
GS 11010-1 - axle load up to 10,000 kg (40 km/h)										
Brake FL4112 410 x 120 mm - wheel connection 280/335/10 ET 0 - M22 x 1.5										
120 x 15	1,800	700	1,083	11,000	11,000	10,000	10,000	10,000	9,000	55.88.460.623
120 x 15	1,850	930	363	13,000	11,500	10,000	11,500	10,500	9,000	55.88.460.625
120 x 15	1,850	750	1,133	11,000	11,000	10,000	10,000	10,000	9,000	55.88.460.627
120 x 15	1,950	1,000	463	12,500	11,500	10,000	11,500	10,500	9,000	55.88.460.629
120 x 15	1,950	850	1,233	11,000	11,000	10,000	10,000	10,000	9,000	55.88.460.631
120 x 15	2,000	1,050	513	12,500	11,500	10,000	11,500	10,500	9,000	55.88.460.633
120 x 15	2,000	900	1,283	11,000	11,000	10,000	10,000	10,000	9,000	55.88.460.635
120 x 15	2,050	1,100	563	12,500	11,500	10,000	11,500	10,500	9,000	55.88.460.637
120 x 15	2,050	950	1,333	11,000	11,000	10,000	10,000	10,000	9,000	55.88.460.639
120 x 15	2,150	1,200	663	12,500	11,500	10,000	11,500	10,500	9,000	55.88.460.641
120 x 15	2,150	1,050	1,433	11,000	11,000	10,000	10,000	10,000	9,000	55.88.460.643
GS 12010 - axle load up to 12.000 kg (40 km/h)										
Brake FL4118 410 x 180 mm - wheel connection 280/335/10 ET 0 - M22 x 1.5										
150 x 10	1,950	900	405	14,000	14,000	13,000	13,000	13,000	12,000	55.72.449.600
150 x 10	1,950	750	1,175	12,000	12,000	12,000	11,500	11,500	11,500	55.72.449.602
150 x 10	2,000	1,050	455	15,000	15,000	13,000	14,500	13,500	12,000	55.72.449.604
150 x 10	2,000	800	1,225	12,000	12,000	12,000	11,500	11,500	11,500	55.72.449.606
150 x 10	2,050	1,100	505	15,000	15,000	13,000	14,500	13,500	12,000	55.72.449.608
150 x 10	2,050	850	1,275	12,000	12,000	12,000	11,500	11,500	11,500	55.72.449.610
150 x 10	2,150	1,150	605	14,500	14,500	13,000	13,500	13,500	12,000	55.72.449.612
150 x 10	2,150	950	1,375	12,000	12,000	12,000	11,500	11,500	11,500	55.72.449.614
150 x 10	2,225	1,150	680	13,500	13,500	13,000	12,500	12,500	12,000	55.72.449.616
150 x 10	2,225	1,025	1,450	12,000	12,000	12,000	11,500	11,500	11,500	55.72.449.618
GS 12010 - axle load up to 13,000 kg (40 km/h)										
Brake FL4118 410 x 180 mm - wheel connection 280/335/10 ET 0 - M22 x 1.5										
150 x 16	1,950	900	405	15,000	15,000	13,000	15,000	13,500	12,000	55.72.449.601
150 x 16	1,950	750	1,175	15,000	15,000	13,000	15,000	13,500	12,000	55.72.449.603
150 x 16	2,000	1,050	455	15,000	15,000	13,000	15,000	13,500	12,000	55.72.449.605
150 x 16	2,000	800	1,225	15,000	15,000	13,000	15,000	13,500	12,000	55.72.449.607
150 x 16	2,050	1,100	505	15,000	15,000	13,000	15,000	13,500	12,000	55.72.449.609
150 x 16	2,050	850	1,275	15,000	15,000	13,000	15,000	13,500	12,000	55.72.449.611
150 x 16	2,150	1,150	605	15,000	15,000	13,000	15,000	13,500	12,000	55.72.449.613
150 x 16	2,150	950	1,375	15,000	15,000	13,000	15,000	13,500	12,000	55.72.449.615
150 x 16	2,225	1,150	680	15,000	15,000	13,000	15,000	13,500	12,000	55.72.449.617
150 x 16	2,225	1,025	1,450	15,000	15,000	13,000	15,000	13,500	12,000	55.72.449.619

Axle cross section (mm)	Track width SP (mm)	Spring centre FM (mm)	Air cylinder bracket centre GM (mm)	Static axle load (kg)						BPW code number
				40 km/h			60 km/h			
				o	o o	oo	o	o o	oo	
GS 14010 - axle load up to 15,000 kg (40 km/h)										
Brake FL4118 410x180 - wheel connection 280/335/10 ET 0 - M22 x 1.5										
150 x 16	1,950	1,000	405	17,000	16,000	15,000	16,000	15,000	14,000	55.74.449.600
150 x 16	1,950	800	405	17,000	16,000	15,000	16,000	15,000	14,000	55.74.449.601
150 x 16	2,000	1,050	455	17,000	16,000	15,000	16,000	15,000	14,000	55.74.449.602
150 x 16	2,000	850	455	17,000	16,000	15,000	16,000	15,000	14,000	55.74.449.603
150 x 16	2,050	1,100	505	17,000	16,000	15,000	16,000	15,000	14,000	55.74.449.604
150 x 16	2,050	900	505	17,000	16,000	15,000	16,000	15,000	14,000	55.74.449.605
150 x 16	2,100	1,150	555	17,000	16,000	15,000	16,000	15,000	14,000	55.74.449.606
150 x 16	2,100	950	555	17,000	16,000	15,000	16,000	15,000	14,000	55.74.449.607
150 x 16	2,150	1,150	405	17,000	16,000	15,000	16,000	15,000	14,000	55.74.449.608
150 x 16	2,150	1,000	405	17,000	16,000	15,000	16,000	15,000	14,000	55.74.449.609
GS 14010 - axle load up to 15,000 kg (40 km/h)										
Brake FL4118 410 x 180 mm - wheel connection 280/335/10 ET 0 - M22 x 1.5										
150 x 20	1,950	750	1,175	17,000	16,000	15,000	16,000	15,000	14,000	55.74.449.611
150 x 20	2,000	800	1,225	17,000	16,000	15,000	16,000	15,000	14,000	55.74.449.613
150 x 20	2,050	800	1,275	17,000	16,000	15,000	16,000	15,000	14,000	55.74.449.615
150 x 20	2,100	800	1,325	17,000	16,000	15,000	16,000	15,000	14,000	55.74.449.617
150 x 20	2,150	900	1,375	17,000	16,000	15,000	16,000	15,000	14,000	55.74.449.619

Axle cross section (mm)	Track width SP (mm)	Spring centre FM (mm)	Air cylinder bracket centre GM (mm)	Static axle load (kg)			BPW code number
				80 km/h			
				o	o o	oo	
GSN 12010 - axle load up to 12,000 kg (80 km/h)							
Brake SN4220 420 x 200 mm - wheel connection 280/335/10 ET 0 - M22 x 1.5							
150 x 16	1,950	1,000	387	12,000	12,000	12,000	55.72.744.600
150 x 16	1,950	650	1,077	12,000	12,000	12,000	55.72.744.601
150 x 16	2,000	1,050	327	12,000	12,000	12,000	55.72.744.602
150 x 16	2,000	700	1,127	12,000	12,000	12,000	55.72.744.603
150 x 16	2,050	1,100	307	12,000	12,000	12,000	55.72.744.604
150 x 16	2,050	800	1,177	12,000	12,000	12,000	55.72.744.605
150 x 16	2,100	1,150	357	12,000	12,000	12,000	55.72.744.606
150 x 16	2,100	800	1,227	12,000	12,000	12,000	55.72.744.607
150 x 16	2,150	1,150	407	12,000	12,000	12,000	55.72.744.608
150 x 16	2,150	900	1,277	12,000	12,000	12,000	55.72.744.609
150 x 16	2,225	1,150	312	12,000	12,000	12,000	55.72.744.610
150 x 16	2,225	900	1,352	12,000	12,000	12,000	55.72.744.611

The specified versions include weld-on air cylinder brackets and spring plates.
Standard offset: ET 0 mm
Additional versions available on request.

More information: Camber and toe-in, page 10 · Certificates and test reports, page 68-69 · Brake cylinders, page 70-71 · ABS, page 72

BPW AXLES WITH REVERSING MECHANISM FOR OVERRUN HITCHES.

BPW axles with reversing mechanism are notable for their good braking performance and together with matching BPW overrun hitches they form a perfect combination for your vehicle.

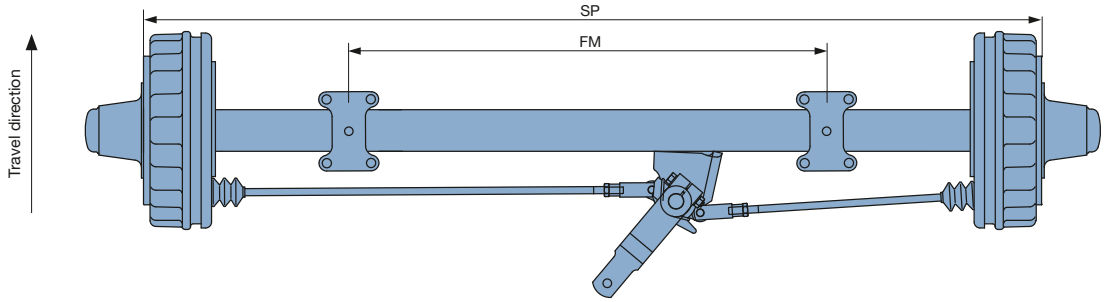

Axle cross section (mm)	Track width SP (mm)	Spring centre FM (mm)	Brake equalisation device	Static axle load (kg)						BPW code number
				25 km/h			40 km/h			
				O	O O	O O	O	O O	O O	
GS 4006 - axle load up to 4,500 kg (25 km/h)										
Wedge-type brake S3006-7 RAZG - 300 x 60 mm - wheel connection 160/205/6 ET 0 - M18 x 1.5										
60	1,360	860	MH	4,500	3,800	–	4,100	3,500	–	55.56.381.600
60	1,360	860	150 LH	4,500	3,800	–	4,100	3,500	–	55.56.381.601
60	1,360	860	150 RH	4,500	3,800	–	4,100	3,500	–	55.56.381.602
60	1,500	1,000	MH	4,500	3,800	–	4,100	3,500	–	55.56.381.603
60	1,500	1,000	200 LH	4,500	3,800	–	4,100	3,500	–	55.56.381.604
60	1,500	1,000	200 RH	4,500	3,800	–	4,100	3,500	–	55.56.381.605
60	1,600	1,100	MH	4,500	3,800	–	4,100	3,500	–	55.56.381.606
60	1,600	1,100	200 LH	4,500	3,800	–	4,100	3,500	–	55.56.381.607
60	1,600	1,100	200 RH	4,500	3,800	–	4,100	3,500	–	55.56.381.608
GS 4006 - axle load up to 4,500 kg (25 km/h)										
Wedge-type brake S3008 RA - 300 x 80 mm - wheel connection 160/205/6 ET 0 - M18 x 1.5										
60	1,500	1,000	MH	4,500	3,800	–	4,100	3,500	–	55.56.356.600

Standard offset: ET 0 mm.
Spring seats possible on request.
Brake equalisation at the rear, optionally in the centre, 250 mm left hand and 250 mm right hand possible.

UP TO 8 t AXLE LOAD

Axle cross section (mm)	Track width SP (mm)	Spring centre FM (mm)	Brake equalisation device	Static axle load (kg)						BPW code number
				25 km/h			40 km/h			
				O	O O	O O	O	O O	O O	
GS 5506 - axle load up to 5,500 kg (25 km/h)										
Wedge-type brake S 3006-7 RAZG - 300 x 60 mm - wheel connection 160/205/6 ET 0 - M18 x 1.5										
70	1,500	1,000	MH	7,000	6,000	5,500	6,500	5,500	5,000	55.63.381.600
70	1,500	1,000	200 LH	7,000	6,000	5,500	6,500	5,500	5,000	55.63.381.601
70	1,500	1,000	200 RH	7,000	6,000	5,500	6,500	5,500	5,000	55.63.381.602
70	1,700	1,200	MH	7,000	6,000	5,500	6,500	5,500	5,000	55.63.381.603
70	1,700	1,200	250 LH	7,000	6,000	5,500	6,500	5,500	5,000	55.63.381.604
70	1,700	1,200	250 RH	7,000	6,000	5,500	6,500	5,500	5,000	55.63.381.605
70	1,800	1,300	MH	7,000	6,000	5,500	6,500	5,500	5,000	55.63.381.606
70	1,800	1,300	250 LH	7,000	6,000	5,500	6,500	5,500	5,000	55.63.381.607
70	1,800	1,300	250 RH	7,000	6,000	5,500	6,500	5,500	5,000	55.63.381.608
70	2,000	1,500	MH	7,000	6,000	5,500	6,500	5,500	5,000	55.63.381.609
GS 5506 - axle load up to 5,500 kg (25 km/h)										
Wedge-type brake S3008 RA - 300 x 80 mm - wheel connection 160/205/6 ET 0 - M18 x 1.5										
70	1,500	1,000	MH	7,000	6,000	5,500	6,500	5,500	5,000	55.63.356.600
70	1,500	1,000	200 LH	7,000	6,000	5,500	6,500	5,500	5,000	55.63.356.601
70	1,500	1,000	200 RH	7,000	6,000	5,500	6,500	5,500	5,000	55.63.356.602
70	1,700	1,200	MH	7,000	6,000	5,500	6,500	5,500	5,000	55.63.356.603
70	1,700	1,200	250 LH	7,000	6,000	5,500	6,500	5,500	5,000	55.63.356.604
70	1,700	1,200	250 RH	7,000	6,000	5,500	6,500	5,500	5,000	55.63.356.605
70	1,800	1,300	MH	7,000	6,000	5,500	6,500	5,500	5,000	55.63.356.606
70	1,800	1,300	250 LH	7,000	6,000	5,500	6,500	5,500	5,000	55.63.356.607
70	1,800	1,300	250 RH	7,000	6,000	5,500	6,500	5,500	5,000	55.63.356.608
70	2,000	1,500	MH	7,000	6,000	5,500	6,500	5,500	5,000	55.63.356.609
GS 7008 - axle load up to 7,000 kg (25 km/h)										
Wedge type brake S3008 RA - 300 x 80 mm - wheel connection 220/275/8 ET 0 - M20 x 1.5										
80	1,800	1,300	MH	8,000	7,500	7,000	8,000	7,000	6,500	55.67.356.606
80	1,800	1,300	250 LH	8,000	7,500	7,000	8,000	7,000	6,500	55.67.356.607
80	1,800	1,300	250 RH	8,000	7,500	7,000	8,000	7,000	6,500	55.67.356.608
80	2,050	1,500	MH	8,000	7,500	7,000	8,000	7,000	6,500	55.67.356.609
80	2,050	1,500	250 LH	8,000	7,500	7,000	8,000	7,000	6,500	55.67.356.610
80	2,050	1,500	250 RH	8,000	7,500	7,000	8,000	7,000	6,500	55.67.356.611
GS 8008 - axle load up to 8,000 kg (25 km/h)										
Wedge type brake S3008 RA - 300 x 80 mm - wheel connection 220/275/8 ET 0 - M20 x 1.5										
90	1,800	1,300	MH	8,000	8,000	8,000	8,000	8,000	8,000	55.70.356.600
90	1,800	1,300	250 LH	8,000	8,000	8,000	8,000	8,000	8,000	55.70.356.601
90	1,800	1,300	250 RH	8,000	8,000	8,000	8,000	8,000	8,000	55.70.356.602
90	2,050	1,500	MH	8,000	8,000	8,000	8,000	8,000	8,000	55.70.356.603
90	2,050	1,500	250 LH	8,000	8,000	8,000	8,000	8,000	8,000	55.70.356.604
90	2,050	1,500	250 RH	8,000	8,000	8,000	8,000	8,000	8,000	55.70.356.605

In certain technical conditions axle can be provided with cable tubes (RASK) instead of brake linkage (RAZG).

More information: Certificates and test reports, page 68-69

BPW OVERRUN HITCHES.
FOR AXLES WITH REVERSING MECHANISM.

With overrun hitches type AVE 2000, AVEG 2000 and AVEK 2000 in conjunction with BPW axles with reversing mechanism and special transmission devices, BPW offers a safe and low-maintenance brake system for all vehicles in which no power brake can be used.

The type AVEG 2000 is equipped with a cranked towing eye to reduce coupling height. Due to the lower response threshold, the type AVEK 2000 is particularly designed for vehicles with a lower permissible total weight.

Version codes for BPW AVE 2000 overrun hitches

Example

A	H	P	10	1	
A					Driving speed up to 25 km/h
B					Driving speed above 25 km/h
	H				High total weight range (4,920 kg - 8,000 kg)
	N				Low total weight range (3,242 kg - 5,600 kg)
		P			With flange plate
		O			Without flange plate
		V			Without flange plate, 155 mm longer housing
			10		100 mm overrun travel
			12		120 mm overrun travel
				1	Steering lever in the centre at the top
				2	Steering lever at the top left
				3	Steering lever at the top right

AVE 2000

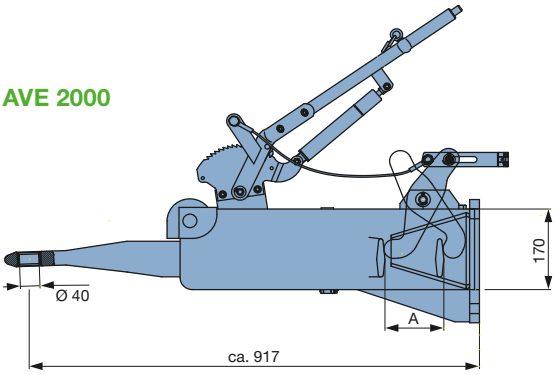

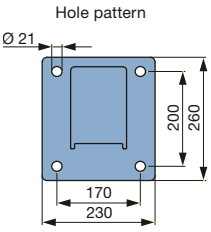

AVEG 2000

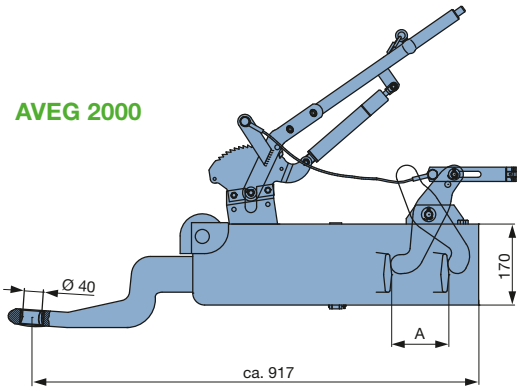

Version	Speed: Up to 25 km/h	Speed: More than 25 km/h	Permissible total weight min. – max. (kg)	Max. Permissible drawbar load (kg)	Wheel brake	Overrun travel A (mm)	Steering lever: transmission (mm)	BPW Code number
AVE 2000								
AO + BHO	•	•	4,920–8,000	1,600/1,000	S 3006-7 RA	120	120/100	48.69.533.062
AP + BHP	•	•	4,920–8,000	1,600/1,000	S 3008 RA	100	120/93	48.69.533.006
AP + BHP	•	•	4,920–8,000	1,600/1,000	S 3006-7 RA	120	120100	48.69.533.040
AP + BHP	•	•	4,920–8,000	1,600/1,000	S 3008 RA	100	120/93	48.69.533.009
AV + BHV	•	•	4,920–8,000	1,600/1,000	S 3008 RA	100	120/93	48.69.533.013
AV + BHV	•	•	4,920–8,000	1,600/1,000	S 3006-7 RA	120	120/100	48.69.533.041
BNO	•	•	3,242–5,600	840	S 3006-7 RA	120	120/100	48.63.533.028
BNP	•	•	3,242–5,600	840	S 3008 RA	100	120/93	48.63.533.014
BNP	•	•	3,242–5,600	840	S 3006-7 RA	120	120/100	48.63.533.020
BNV	•	•	3,242–5,600	840	S 3006-7 RA	120	120/100	48.63.533.021
AVEG 2000								
NO + HO	•	•	5,046–8,000	1,200/1,000	S 3006-7 RA	120	120/75 + 100	48.69.533.136
NP	•	•	5,046–8,000	1,200/1,000	S 3006-7 RA	120	120/100	48.69.533.134
AVEK 2000								
A2	•	•	1,840–7,250	500	S 3006-7 RA	120	120/100	48.68.533.001
B	•	•	2,310–8,000	500	S 3006-7 RA	120	120/100	48.69.533.300

Additional versions available on request.
For replacement needs, additional versions are available, also without reversing mechanism.

More information: Surface finishing, page 6–7

BPW OVERRUN HITCHES.
FOR MULTI-AXLE TRAILERS.

The BPW overrun hitch AM 2000 is particularly designed for 2-axle vehicles. All AM 2000 are equipped with a height adjustment device (Klemmfix). It significantly facilitates lifting and uncoupling of vehicles.

Version codes for BPW overrun hitches AM 2000

For example

B	L	12	
A			Driving speed up to 25 km/h
B			Driving speed above 25 km/h
	K		Short total length (1,960 mm)
	L		Long total length (2,050 mm)
		12	120 mm overrun travel

Your benefits at a glance:

- **Very good braking performance in conjunction with BPW axles with reversing mechanism**
- **KTL_{Zn}-coating**
- **Versions for different weight ranges**
- **Robust overrun mechanism**
- **Height adjustment device (Klemmfix) for easier coupling with the vehicle (AM 2000)**
- **Special versions for special applications**

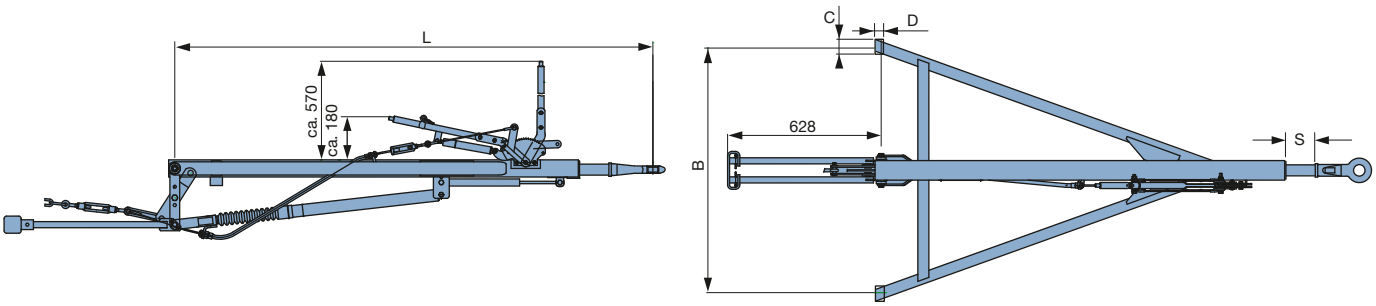

Version	Permissible total weight min.–max.		Wheel brake	Overrun travel (S)	Total length (L)	Fork dimension			Steering lever: transmission (mm)	BPW Code number
	Up to 25 km/h	More than 25 km/h				B mm	C mm	D mm		
AM 2000										
AK 12 / BK 12	3,264–8,000	5,175–8,000	S 3006-7	120	1,960	860	60	24	120/100	48.69.833.040
AK 12 / BK 12	3,264–8,000	5,175–8,000	S 3008	120	1,960	860	60	24	120/75	48.69.833.010
AK 12 / BK 12	3,264–8,000	5,175–8,000	S 3006-7	120	1,960	1,000	60	24	120/100	48.69.833.041
AK 12 / BK 12	3,264–8,000	5,175–8,000	S 3008	120	1,960	1,000	60	24	120/75	48.69.833.011
AK 12 / BK 12	3,264–8,000	5,175–8,000	S 3006-7	120	1,960	1,000	70	26	120/100	48.69.833.042
AK 12 / BK 12	3,264–8,000	5,175–8,000	S 3008	120	1,960	1,000	70	26	120/75	48.69.833.012
AK 12 / BK 12	3,264–8,000	5,175–8,000	S 3006-7	120	1,960	1,100	70	26	120/100	48.69.833.043
AK 12 / BK 12	3,264–8,000	5,175–8,000	S 3008	120	1,960	1,100	70	26	120/75	48.69.833.013
AK 12 / BK 12	3,264–8,000	5,175–8,000	S 3006-7	120	1,960	1,100	80	28	120/100	48.69.833.078
AK 12 / BK 12	3,264–8,000	5,175–8,000	S 3006-7	120	1,960	1,200	70	26	120/100	48.69.833.044
AK 12 / BK 12	3,264–8,000	5,175–8,000	S 3008	120	1,960	1,200	70	26	120/75	48.69.833.014
AL 12 / BL 12	3,264–8,000	5,175–8,000	S 3006-7	120	2,050	1,100	70	26	120/100	48.69.833.057
AL 12 / BL 12	3,264–8,000	5,175–8,000	S 3006-7	120	2,050	1,200	70	26	120/100	48.69.833.068

More information: Axles with reversing mechanism, page 26-27 · Klemmfix, page 33

BPW TRANSMISSION DEVICES.
COMPENSATING FORCES.

Transmission devices designed for each particular vehicle and optimally laid cables, in conjunction with BPW overrun hitches and BPW axles with reversing mechanism, guarantee the best braking performance.

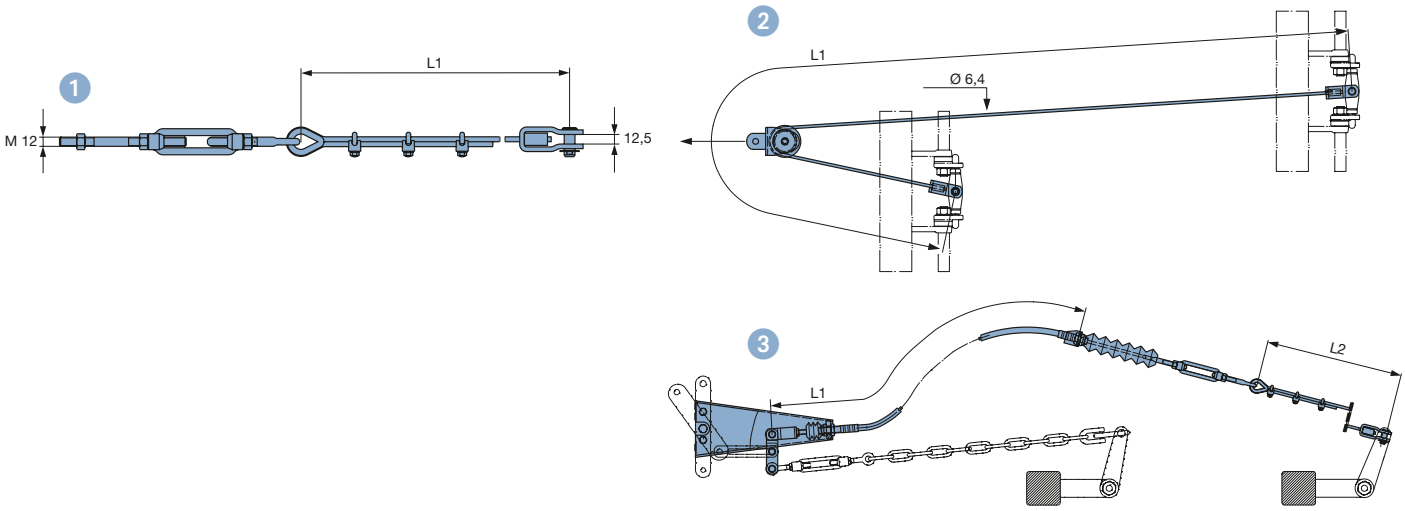

	L1 (mm)	L2 (mm)	Flexball	Connection	BPW code number
1	**Transmission devices for overrun hitch AVE 2000 - 2-wheel operation/single axle**				
	1,850	–	–	Yoke/thread bolt	05.089.61.17.0
	3,000	1,500	–	Yoke/thread bolt	05.085.51.23.0
	3,475	2,400	–	Yoke/thread bolt	05.085.51.83.0
2	**Transmission devices for overrun hitch AVE 2000 - Tandem**				
	1,840	–	–	Yoke/Yoke	05.085.50.02.0
	2,670	–	–	Yoke/Yoke	05.085.51.26.0
3	**Transmission devices for overrun hitch AM 2000 - 4-wheel operation/double axle**				
	1,200	3,000	•	–	05.085.50.01.0
	2,300	1,240	–	–	05.085.50.41.0
	950	1,240	–	–	05.085.50.39.0

Additional versions available on request.

BPW CONNECTING ASSEMBLIES. FOR YOUR INDIVIDUAL REQUIREMENTS.

High-quality connecting assemblies round off the extensive BPW product range. BPW offers the right solution for every requirement between the tractor vehicle and its trailer – from the hitch block and under-run bar through to drawbars and turntables. With a maximum level of safety and reliability. Typically BPW.

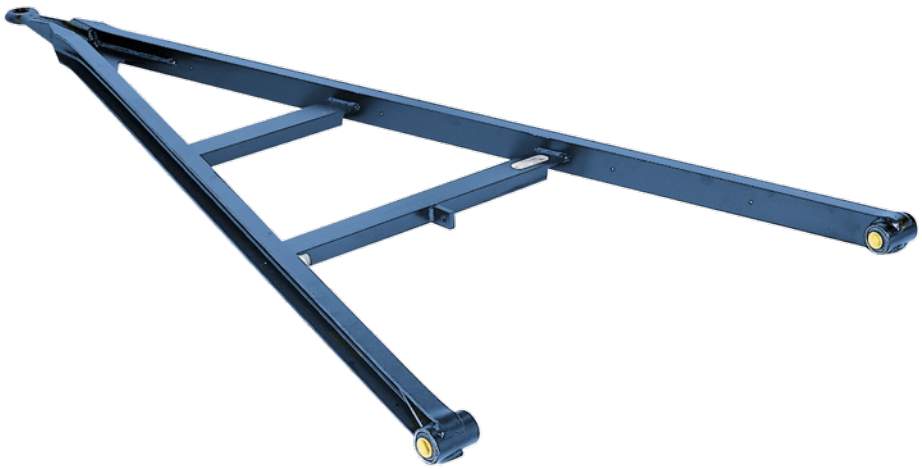

In addition, BPW offers optional height-adjustment devices and holding devices for drawbars:

Klemmfix 72 is a height adjustment device for vertically pivotable drawbars.

Spring washers serve only as height adjustment and support device for support of Klemmfix 72.

Return spring with clamp lock can be used directly as height adjustment device.

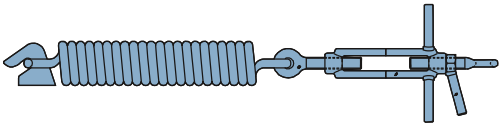

Your benefits at a glance:

- **For turntable drawbar trailer with a permissible total weight of 12 t to 48 t**
- **Common sizes are available from stock**
- **With EC approval or individual certificates**
- **KTL_{Zn}-coating**
- **High corrosion resistance ensured by zinc-plated towing bars in length-adjustable drawbars**
- **Available in different versions:**
  - **With inclined towing eye**
  - **With fixed central tube**
  - **Straight or cranked**
  - **Length-adjustable**
  - **With swivelling eye**
  - **With semi-automatic length adjustment**
  - **With low-maintenance silent-bushes**

www.bpw.de/en/products/commercial-vehicles/drawbar-assemblies/drawbars.html

BPW STEERING AXLES.
STEERING TOWARDS COST REDUCTION.

BPW steering axles GSLA/GSLL are designed both for self-steered and positively steered vehicles. BPW's steering axle GSL is a purely positive steering axle. The advantage of a GSL axle is the reduction in steering forces. In addition, this axle allows larger steering angles due to its special design.

Version: GSLA/GS(H)LL

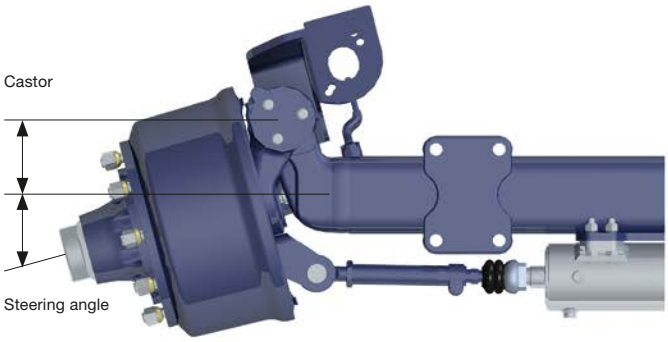

Version: GSL

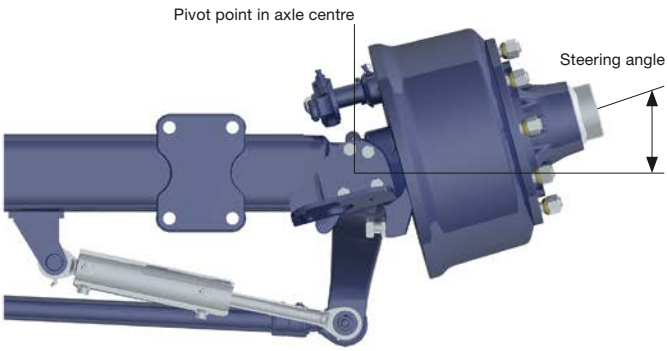

Self-steering
When the trailer follows the tractor in a curve, the wheel castor ensures the wheels to turn in accordance with the curve radius.

For speeds higher than 40 km/h, BPW recommends locking the steering axle. The steering axle must be locked while driving backwards.

Positive steering
Hydraulic activation:
When cornering the tractor, the cylinder installed between the tractor and the trailer is actuated according to the curve radius. The pressurised oil regulates the movement of the steering axle.

Electronic activation:
In electronic positive steering systems, the steering axle is actuated by a potentiometer installed on the drawbar. A computer activates a hydraulic unit which again actuates the axle by hydraulic pressure.

For safety reasons, when electronic steering systems are used, BPW recommends application of steering axles type GSLL and GSLA.

Functional principle of BPW combination cylinders

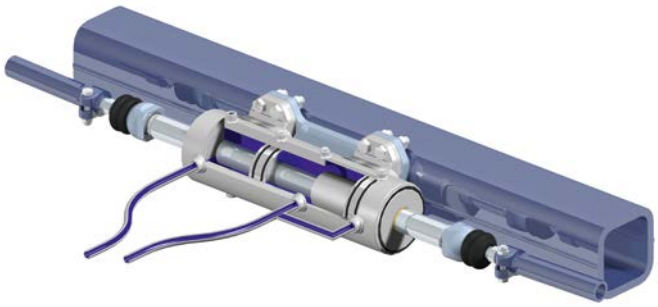

Positive steering (straight-ahead driving)

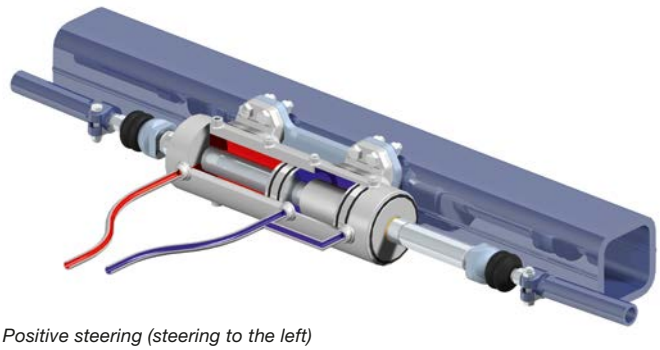

Positive steering (steering to the left)

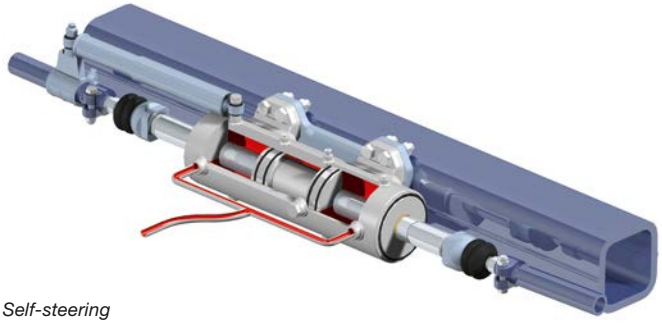

Self-steering
(steering axle is locked for driving backwards 40 km/h)

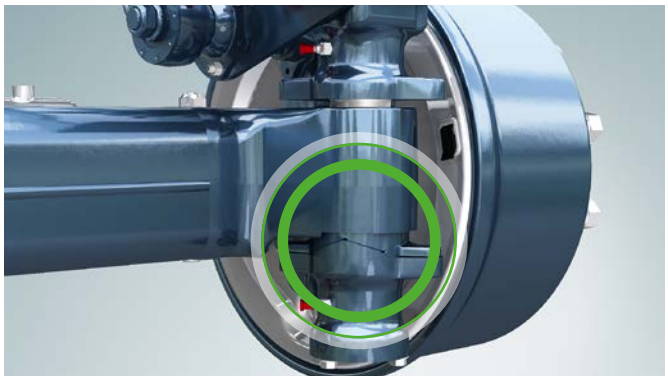

Steering housing when driving straight ahead (zero position)

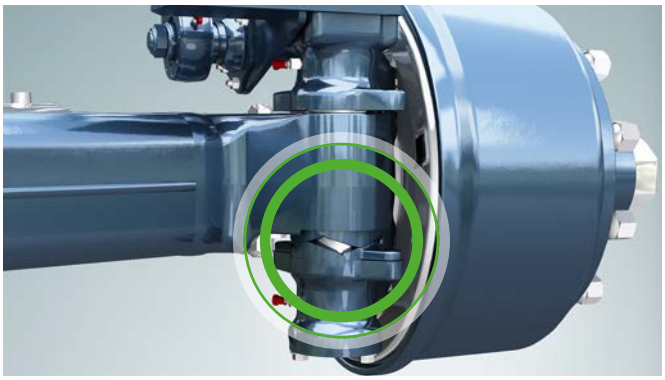

Steering housing when cornering (up to 27 degrees, depending on vehicle model)

Axle beam and axle stub are connected via steering pivot with wave-like thrust bearings. When driving straight-ahead (zero position), the wave-like thrust washers hold the wheels on the track. The vehicle pushes the wave contours of the upper and lower thrust washer against each other with its weight. The wheels remain in the correct and stable straight-ahead position. When the trailer follows the tractor into a curve, the wheel castor ensures the wheels turn in accordance with the curve radius (thrust washers slide over one another). The steering axle ensures the suspension is steered better into the curve and almost follows the tractor‘s circular path. The generated lateral tyre forces are optimally distributed over all axles.

BPW SINGLE-CYLINDER STEERING AXLE. FOR POSITIVE STEERING OR SELF-STEERING.

With the newly developed combination cylinder, due to a simplified connection on the steering cylinder, the steering axle type GSLA/GSLL can be used both for a hydraulic or electronic positive steering system and self-steering axle. The multifunctional application of the steering axle reduced the storage at the vehicle manufacturer. The compact design allows an easy installation in the vehicle, even with a limited installation space.

Your benefits at a glance:

- **An axle for self-steering and positive steering**
- **Reduced storage**
- **Compact design**
- **Optimal ground protection when cornering**
- **Better manoeuvrability in curves**
- **Stable driving behaviour due to the wave-like thrust washer**
- **KTL_{Zn}-coating**
- **Protection of superstructure and frame**
- **Reduced and even tyre wear**

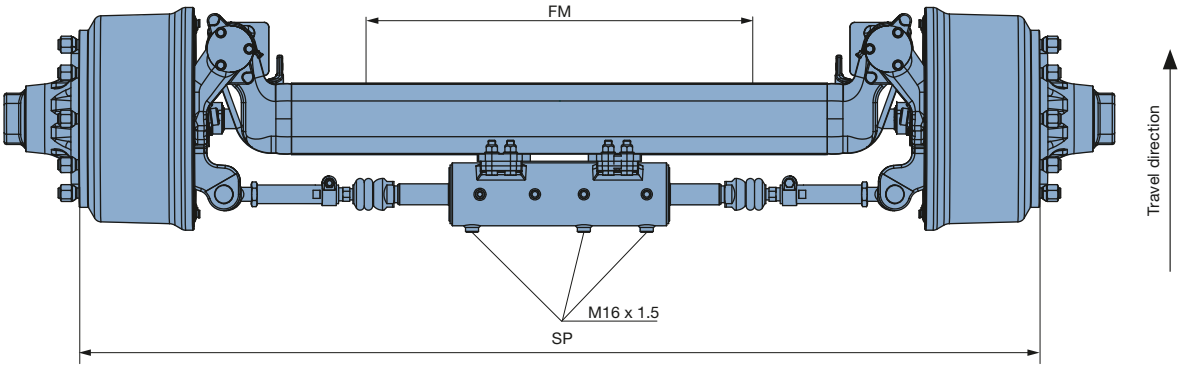

Axle cross-section (mm)	Track width SP (mm)	Spring centre FM (mm)	Axle load 40 km/h	Axle load 60 km/h	Axle load 80 km/h	BPW code number
GSLA 11010-1 - axle load up to 10,500 kg (40 km/h)						
Brake FL4112 410 x 120 mm - wheel connection 280/335/10 ET 0 - M22 x 1.5						
120 x 15	1,950	850	10,500	10,000	–	36.88.460.900
120 x 15	2,000	900	10,500	10,000	–	36.88.460.901
120 x 15	2,050	950	10,500	10,000	–	36.88.460.902
120 x 15	2,100	1,000	10,500	10,000	–	36.88.460.903
120 x 15	2,150	1,050	10,500	10,000	–	36.88.460.904
120 x 15	2,225	1,100	10,500	10,000	–	36.88.460.905
GS(H)LL 12010 - axle load up to 13,000 kg (40 km/h)						
Brake FL4118 410 x 180 mm - wheel connection 280/335/10 ET 0 - M22 x 1.5						
150 x 16	1,950	850	13,000	12,000	–	26.72.449.600
150 x 16	2,000	900	13,000	12,000	–	26.72.449.601
150 x 16	2,050	950	13,000	12,000	–	26.72.449.602
150 x 16	2,100	1,000	13,000	12,000	–	26.72.449.603
150 x 16	2,150	1,050	13,000	12,000	–	26.72.449.604
150 x 16	2,225	1,100	13,000	12,000	–	26.72.449.605
GS(H)LL 14010 - axle load up to 15,000 kg (40 km/h)						
Brake FL4118 410x180 mm - wheel connection 280/335/10 ET 0 - M22 x 1.5						
150 x 16	1,950	850	15,000	14,000	–	36.74.449.600
150 x 20	1,950	600	15,000	14,000	–	36.74.449.601
150 x 16	2,000	900	15,000	14,000	–	36.74.449.602
150 x 20	2,000	650	15,000	14,000	–	36.74.449.603
150 x 16	2,050	950	15,000	14,000	–	36.74.449.604
150 x 20	2,050	700	15,000	14,000	–	36.74.449.605
150 x 16	2,100	1,000	15,000	14,000	–	36.74.449.606
150 x 20	2,100	750	15,000	14,000	–	36.74.449.607
150 x 16	2,150	1,050	15,000	14,000	–	36.74.449.608
150 x 20	2,150	800	15,000	14,000	–	36.74.449.609
GSNLL 12010 - axle load up to 12,000 kg (80 km/h)						
Brake SN4220 420 x 200 mm - wheel connection 280/335/10 ET 0 - M22 x 1.5						
150 x 16	1,950	800	–	–	12,000	36.72.744.600
150 x 16	2,000	900	–	–	12,000	36.72.744.601
150 x 16	2,050	950	–	–	12,000	36.72.744.602
150 x 16	2,100	1,000	–	–	12,000	36.72.744.603
150 x 16	2,150	1,050	–	–	12,000	36.72.744.604
150 x 16	2,225	1,100	–	–	12,000	36.72.744.605

Version GSLA is also available with 8-hole wheel connection.
The specified spring centres depend on the track width and the tyres.
Standard delivery state for positive steering.
Installation parts kit for self-steering is available as an option.

BPW AXLES FOR POSITIVE STEERING SYSTEMS.
SMALL TURNING CIRCLE, REDUCED STEERING FORCES.

BPW type GSL steering axles are particularly designed for application in conjunction with a positive steering system. With centrally mounted steering pivots the GSL steering axle allows a large steering angle for a good manoeuvrability. At the same time, the forces generated inside the steering housing are significantly reduced. This helps to protect the steering axle as well as the entire vehicle.

Your benefits at a glance:

- **Small turning radius**
- **Reduction in forces inside the steering housing due to the centrally mounted steering pivots**
- **Axle for hydraulic positive steering systems**
- **Cam plate for highest driving stability**
- **Air cylinder brackets adapted to the installation space conditions**
- **Reduction in tyre wear due to the realisation of toe-out**
- **Up to 25° steering angle**

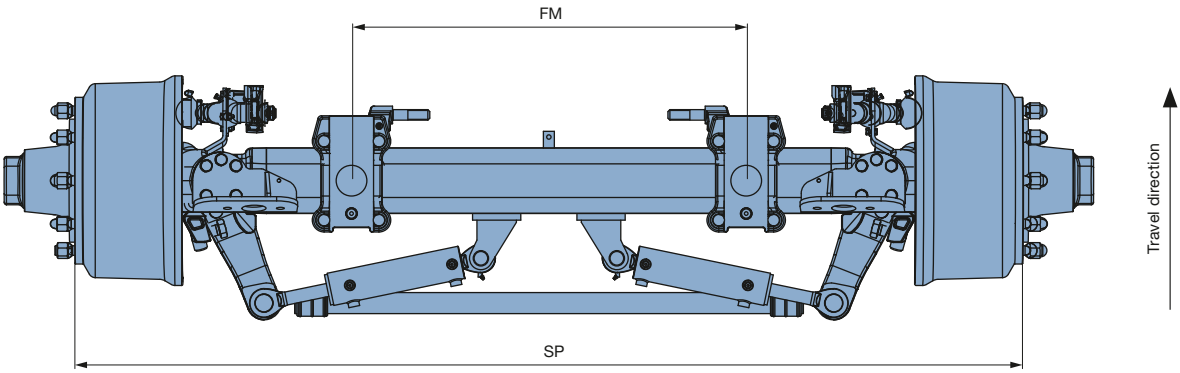

Axle cross-section (mm)	Track width SP (mm)	Spring centre FM (mm)	Axle load 40 km/h	Axle load 60 km/h	BPW code number of rear axle	BPW code number of front axle for tridem
GSL 11010-1 - axle load up to 10,500 kg (40 km/h)						
Brake FL4112 410 x 120 mm - wheel connection 280/335/10 ET 0 - M22 x 1.5						
120 x 15	1,950	850	10,500	10,000	36.88.460.906	36.88.460.907
120 x 15	2,000	900	10,500	10,000	36.88.460.908	36.88.460.909
120 x 15	2,050	950	10,500	10,000	36.88.460.910	36.88.460.911
120 x 15	2,100	1,000	10,500	10,000	36.88.460.912	36.88.460.913
120 x 15	2,150	1,050	10,500	10,000	36.88.460.914	36.88.460.915
120 x 15	2,225	1,100	10,500	10,000	36.88.460.916	36.88.460.917
GSL 12010 - axle load up to 12,000 kg (40 km/h)						
Brake FL4118 410 x 180 mm - wheel connection 280/335/10 ET 0 - M22 x 1.5						
150 x 16	1,950	850	12,000	11,000	26.72.449.606	26.72.449.607
150 x 16	2,000	900	12,000	11,000	26.72.449.608	26.72.449.609
150 x 16	2,050	950	12,000	11,000	26.72.449.610	26.72.449.611
150 x 16	2,100	1,000	12,000	11,000	26.72.449.612	26.72.449.613
150 x 16	2,150	1,050	12,000	11,000	26.72.449.614	26.72.449.615
150 x 16	2,225	1,100	12,000	11,000	26.72.449.616	26.72.449.617

GSL axles can be used only in conjunction with positive steering systems.
Versions of up to 10,500 kg at 40 km/h are also available with 8-hole wheel connection.
The specified spring centres depend on the track width and the tyres.

More information: Steering axle, page 34-35 · Brake test reports, page 68–69 · Brake cylinders, page 70-71

OUR PRODUCTS USED BY OUR CUSTOMERS.

Fliegl
GIGANT
Fliegl
GIGANT

STREU-MIX

Wernsmann

Eisele

CONOW

BPW'S HYDRO-PNEUMATIC RUNNING GEARS. TO MAKE DRIVING SAFE AND COMFORTABLE.

BPW's product range includes running gears with hydro-pneumatic suspension for vehicles with special roll stability, driving safety and comfort requirements. They are notable for a high degree of equalisation (approx. 270 mm) between the axles with an even axle load distribution. This ensures both very safe and comfortable driving, in particular for trailers which, because of the high centre of gravity, the vehicle can, in certain circumstances, present a critical driving behaviour.

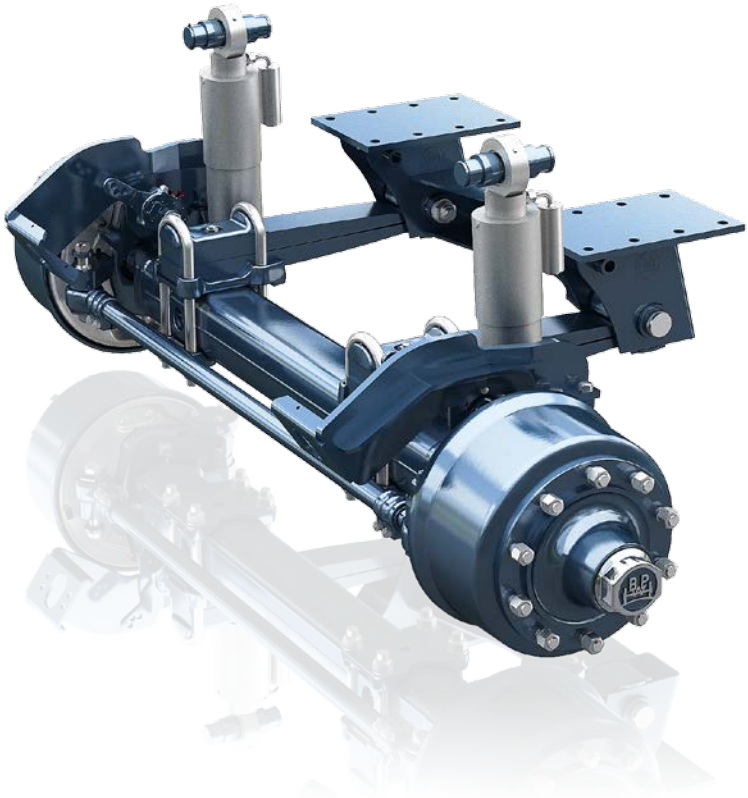

Your benefits at a glance:

- **High driving comfort due to the large spring deflection and complete, dynamic axle equalisation**
- **Ready-to-install system solution**
- **High level of equalisation between the axle modules**
- **Ground protection due to the even load distribution**
- **Stable design**
- **Easy to maintain**
- **Available with the complete brake system (option)**
- **Central lubrication system (option)**
- **Lifting axle (option)**
- **Preparation for tyre pressure control system RDS (option)**

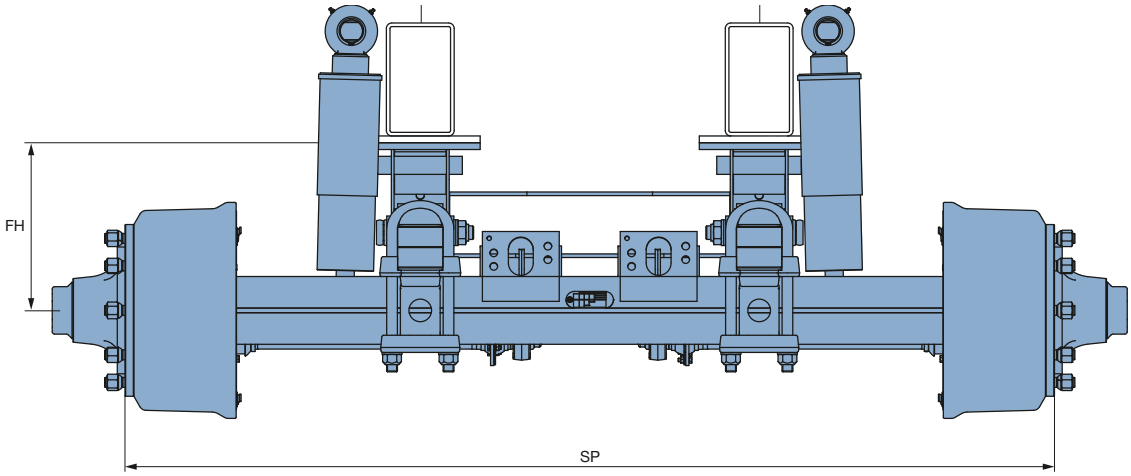

Axle cross-section (mm)	Track width SP (mm)	Spring centre FM (mm)	Ride height (mm)	Axle load (kg)		BPW code number
				40 km/h	60 km/h	
Rigid axle: GSOH 11010-1 - axle load up to 9,000 kg (60 km/h)						
Brake FL4112 410 x 120 mm - wheel connection 280/335/10 ET 0 - M22 x 1.5						
120 x 15	1,950	750	351	10,000	9,000	56.88.08.0600
120 x 15	2,000	750	351	10,000	9,000	56.88.08.0601
120 x 15	2,050	750	351	10,000	9,000	56.88.08.0602
120 x 15	2,100	850	351	10,000	9,000	56.88.08.0603
120 x 15	2,150	850	351	10,000	9,000	56.88.08.0604
120 x 15	2,225	850	351	10,000	9,000	56.88.08.0605
Steering axle: GSOHLA 11010-1 - axle load up to 9,000 kg (60 km/h)						
Brake FL4112 410 x 120 mm - wheel connection 280/335/10 ET 0 - M22 x 1.5						
120 x 15	1,950	650	351	10,000	9,000	56.88.08.0606
120 x 15	2,000	650	351	10,000	9,000	56.88.08.0607
120 x 15	2,050	750	351	10,000	9,000	56.88.08.0608
120 x 15	2,100	750	351	10,000	9,000	56.88.08.0609
120 x 15	2,150	850	351	10,000	9,000	56.88.08.0610
120 x 15	2,225	850	351	10,000	9,000	56.88.08.0611
Rigid axle: GSOH 12010 - axle load up to 12,000 kg (40 km/h)						
Brake FL4118 410 x 180 mm - wheel connection 280/335/10 ET 0 - M22 x 1.5						
150 x 16	1,950	750	371	12,000	11,000	56.72.08.0600
150 x 16	2,000	750	371	12,000	11,000	56.72.08.0601
150 x 16	2,050	750	371	12,000	11,000	56.72.08.0602
150 x 16	2,100	850	371	12,000	11,000	56.72.08.0603
150 x 16	2,150	850	371	12,000	11,000	56.72.08.0604
150 x 16	2,225	850	371	12,000	11,000	56.72.08.0605
Steering axle: GSOHLL 12010 - axle load up to 12,000 kg (40 km/h)						
Brake FL4118 410 x 180 mm - wheel connection 280/335/10 ET 0 - M22 x 1.5						
150 x 16	1,950	650	365	12,000	11,000	56.72.08.0606
150 x 16	2,000	650	365	12,000	11,000	56.72.08.0607
150 x 16	2,050	750	365	12,000	11,000	56.72.08.0608
150 x 16	2,100	750	365	12,000	11,000	56.72.08.0609
150 x 16	2,150	850	365	12,000	11,000	56.72.08.0610
150 x 16	2,225	850	365	12,000	11,000	56.72.08.0611

Version GSOH (L..) also available for 80 km/h.
Steering axles with cast steel steering housing have an axle load of 13,000 kg.
Strongly recommended for axle modules in a tri-axle suspension.
All suspension units are also available with axle type GS 14010.

More information: Camber and toe-in, page 10 · ABS, page 72 · Engineering, page 78

BPW'S HYDRO-PNEUMATIC RUNNING GEARS. ACTIVE AND ELECTRONIC SUSPENSION CONTROL.

The new electronic control system for tried and tested BPW running gear with hydro-pneumatic suspension enables safe and comfortable driving behaviour – also in critical driving situations. The ride height is controlled electronically. A constant ride height is ensured in any loading condition.

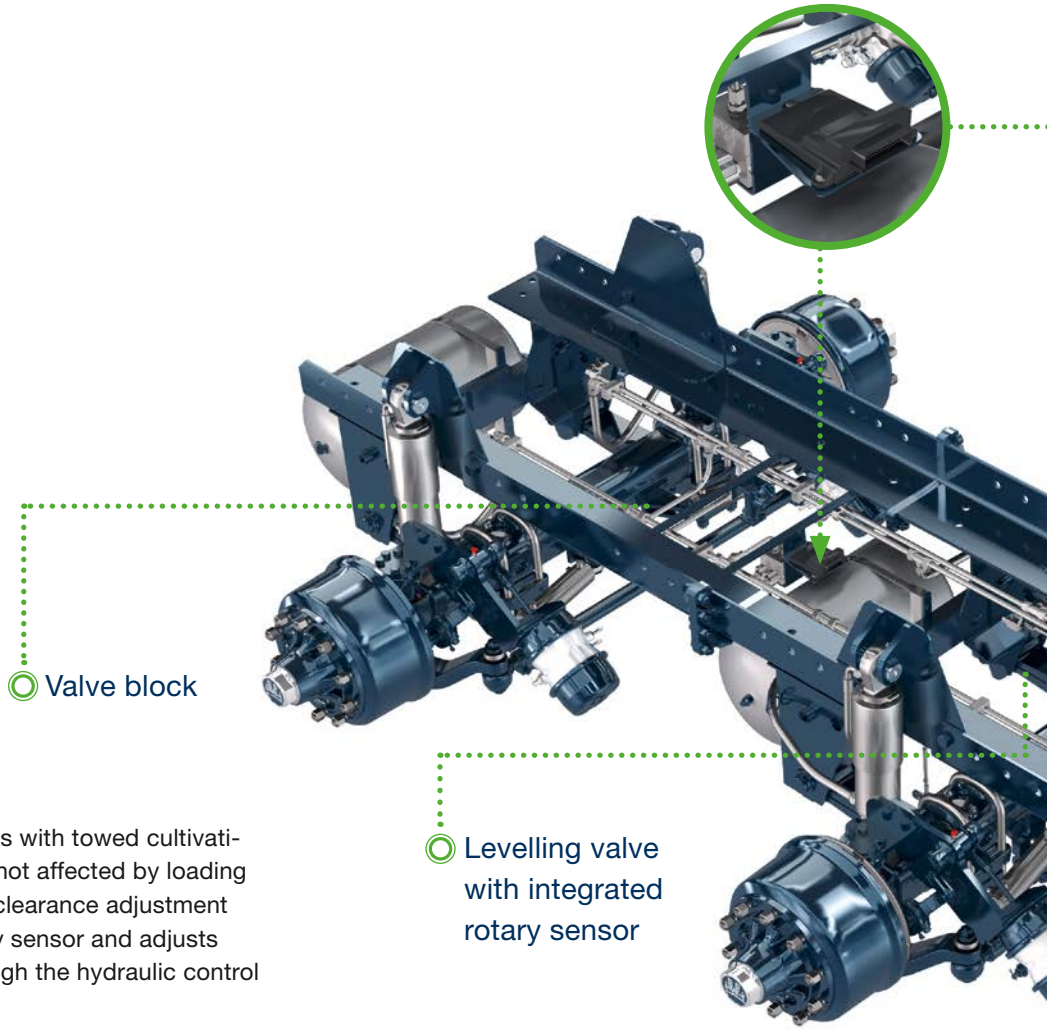

Particularly in cases of manure tanks with towed cultivation devices, a constant ride height, not affected by loading state, is critical. The active ground clearance adjustment detects current changes via a rotary sensor and adjusts the ride height electronically – through the hydraulic control block.

In combination with the option of the active slope compensation control, BPW's running gear with electronic control additionally offers the highest level of safety and comfort when driving on rough terrain.

Possible applications

Control system for different functions:

- Ground clearance adjustment
- Roll stabilisation
- Axle lift function
- Traction assist
- Slope compensation
- Adaptive damping
- Activation of different valves

A control panel can be used to activate additional functions.

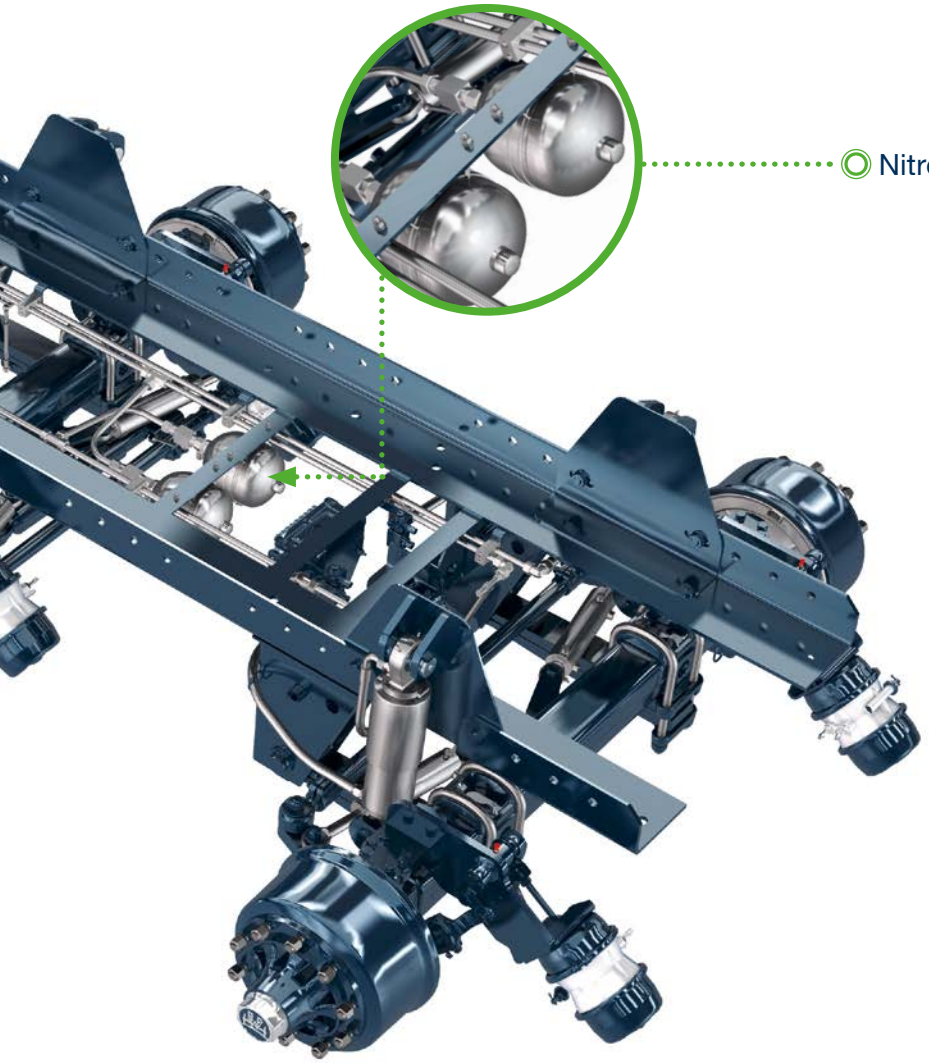

BPW AIR SUSPENSION UNITS.
UNCOMPROMISING COMFORT AND SAFE DRIVING BEHAVIOUR.

Due to the large spring deflection and the high level of equalisation between the axles, BPW air suspension units guarantee a very high driving comfort both in on-road and off-road applications. The BPW air suspension contributes to the protection of frame, superstructure and load.

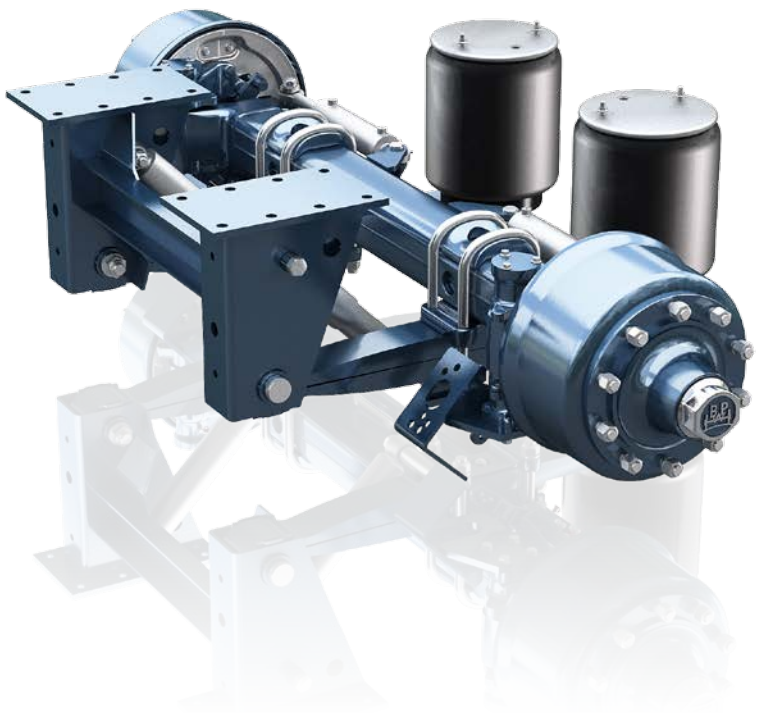

Your benefits at a glance:

- **The highest level of driving comfort due to the large spring deflection and high equalisation between the axles**
- **Ready-to-install system solution**
- **Universal application due to the modular design**
- **Constant ride height in different loading conditions**
- **Ground protection due to the even distribution over all wheels**
- **Easy to service due to the modular design**
- **Available with the complete brake system (option)**
- **Central lubrication system (option)**
- **Lifting axle (option)**
- **Preparation for tyre pressure control system RDS (option)**

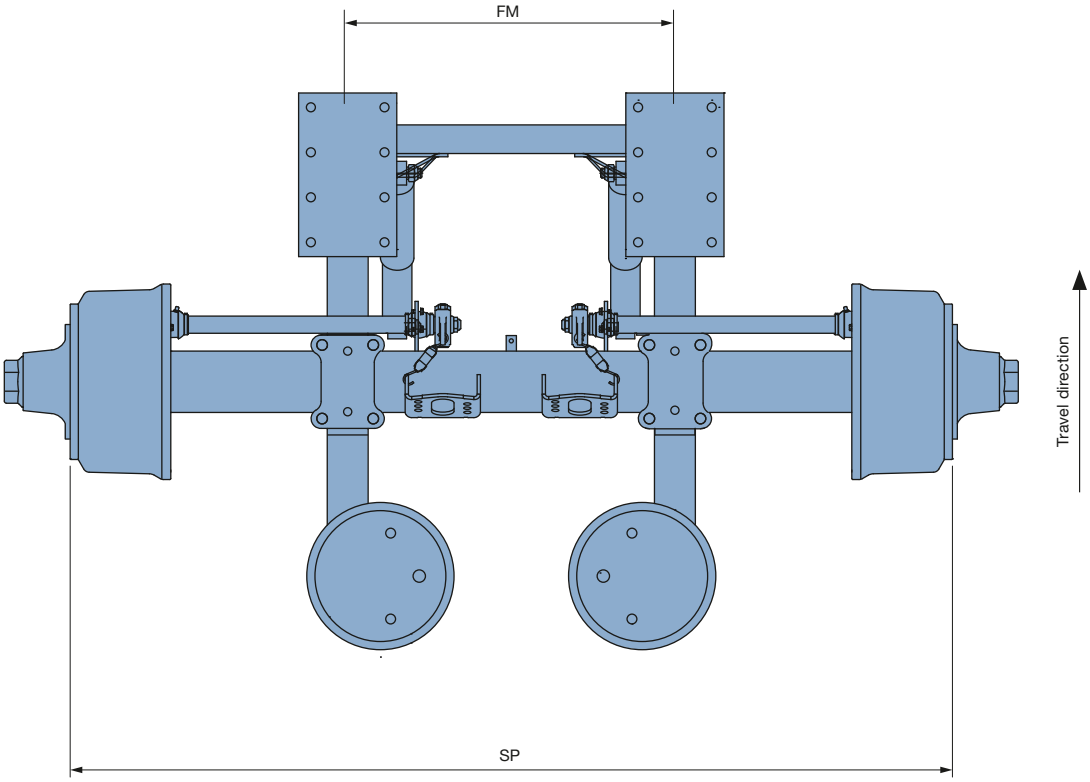

Air suspension unit GSSLU

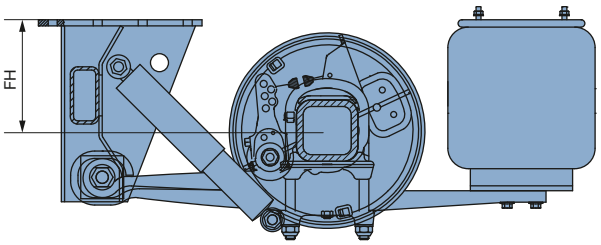

Air suspension unit GSSLO

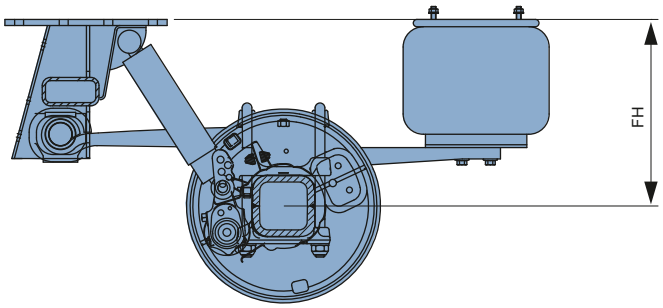

BPW heavy-duty air suspension units

BPW's product range includes a heavy-duty SL HD suspension unit equipped amongst other things with a reinforced axle beam, reinforced trailing arms and air suspension hanger brackets as well as HD shock absorbers.

BPW AIR SUSPENSION UNITS.

Axle cross-section (mm)	Track width SP (mm)	Spring centre FM (mm)	Ride height (mm) laden – unladen	Axle load (kg)		BPW code number
				40 km/h	60 km/h	
Rigid axle: GSSLO 11010-1 - axle load up to 10,000 kg (40 km/h)						
Brake FL4112 410 x 120 mm - wheel connection 280/335/10 ET 0 - M22 x 1.5						
120 x 15	1,950	900	480 – 540	10,000	9,000	56.88.01.0600
120 x 15	2,000	950	480 – 540	10,000	9,000	56.88.01.0601
120 x 15	2,050	1,000	480 – 540	10,000	9,000	56.88.01.0602
120 x 15	2,100	1,000	480 – 540	10,000	9,000	56.88.01.0603
120 x 15	2,150	1,100	480 – 540	10,000	9,000	56.88.01.0604
Steering axle: GSSLOLA 11010-1 - axle load up to 10,000 kg (40 km/h)						
Brake FL4112 410 x 120 mm - wheel connection 280/335/10 ET 0 - M22 x 1.5						
120 x 15	1,950	900	480 – 540	10,000	9,000	56.88.01.0605
120 x 15	2,000	950	480 – 540	10,000	9,000	56.88.01.0606
120 x 15	2,050	1,000	480 – 540	10,000	9,000	56.88.01.0607
120 x 15	2,100	1,000	480 – 540	10,000	9,000	56.88.01.0608
120 x 15	2,150	1,100	480 – 540	10,000	9,000	56.88.01.0609
Rigid axle: GSSLU 11010-1 - axle load up to 10,000 kg (40 km/h)						
Brake FL4112 410 x 120 mm - wheel connection 280/335/10 ET 0 - M22 x 1.5						
120 x 15	1,950	900	270 – 330	10,000	9,000	56.88.01.0610
120 x 15	2,000	900	270 – 330	10,000	9,000	56.88.01.0611
120 x 15	2,050	900	270 – 330	10,000	9,000	56.88.01.0612
120 x 15	2,100	1,000	270 – 330	10,000	9,000	56.88.01.0613
120 x 15	2,150	1,100	270 – 330	10,000	9,000	56.88.01.0614
Steering axle: GSSLULA 11010-1 - axle load up to 10,000 kg (40 km/h)						
Brake FL4112 410 x 120 mm - wheel connection 280/335/10 ET 0 - M22 x 1.5						
120 x 15	1,950	900	270 – 330	10,000	9,000	56.88.01.0615
120 x 15	2,000	900	270 – 330	10,000	9,000	56.88.01.0616
120 x 15	2,050	900	270 – 330	10,000	9,000	56.88.01.0617
120 x 15	2,100	1,000	270 – 330	10,000	9,000	56.88.01.0618
120 x 15	2,150	1,100	270 – 330	10,000	9,000	56.88.01.0619
Rigid axle: GSSLO 12010 - axle load up to 12,000 kg (40 km/h)						
Brake FL4118 410 x 180 mm - wheel connection 280/335/10 ET 0 - M22 x 1.5						
150 x 16	2,000	900	490 – 540	12,000	11,000	56.72.01.0900
150 x 16	2,050	900	490 – 540	12,000	11,000	56.72.01.0901
150 x 16	2,100	1,000	490 – 540	12,000	11,000	56.72.01.0902
150 x 16	2,150	1,100	490 – 540	12,000	11,000	56.72.01.0903
150 x 16	2,225	1,100	490 – 540	12,000	11,000	56.72.01.0904
Steering axle: GSSLOLL 12010 - axle load up to 12,000 kg (40 km/h)						
Brake FL4118 410 x 180 mm - wheel connection 280/335/10 ET 0 - M22 x 1.5						
150 x 16	1,950	800	490 – 540	12,000	11,000	56.72.01.0905
150 x 16	2,000	800	490 – 540	12,000	11,000	56.72.01.0906
150 x 16	2,050	900	490 – 540	12,000	11,000	56.72.01.0907
150 x 16	2,100	900	490 – 540	12,000	11,000	56.72.01.0908
150 x 16	2,150	900	490 – 540	12,000	11,000	56.72.01.0909

HIGH DRIVING COMFORT

Axle cross-section (mm)	Track width SP (mm)	Spring centre FM (mm)	Ride height (mm) laden – unladen	Axle load (kg)			BPW code number
				40 km/h	60 km/h	80 km/h	
Rigid axle: GSSLU 12010 - axle load up to 12,000 kg (40 km/h)							
Brake FL4118 410 x 180 mm - wheel connection 280/335/10 ET 0 - M22 x 1.5							
150 x 16	2,000	900	275 – 370	12,000	11,000	–	56.72.01.0910
150 x 16	2,050	1,000	275 – 370	12,000	11,000	–	56.72.01.0911
150 x 16	2,100	1,000	275 – 370	12,000	11,000	–	56.72.01.0912
150 x 16	2,150	1,100	275 – 370	12,000	11,000	–	56.72.01.0913
150 x 16	2,225	1,100	275 – 370	12,000	11,000	–	56.72.01.0914
Steering axle: GSSLULL 12010 - axle load up to 12,000 kg (40 km/h)							
Brake FL4118 410 x 180 mm - wheel connection 280/335/10 ET 0 - M22 x 1.5							
150 x 16	2,000	800	275 – 370	12,000	11,000	–	56.72.01.0915
150 x 16	2,050	800	275 – 370	12,000	11,000	–	56.72.01.0916
150 x 16	2,100	800	275 – 370	12,000	11,000	–	56.72.01.0917
150 x 16	2,150	900	275 – 370	12,000	11,000	–	56.72.01.0918
150 x 16	2,225	900	275 – 370	12,000	11,000	–	56.72.01.0919
Rigid axle: GSNSLO 12010 - axel load up to 12,000 kg (80 km/h)							
Brake SN4220 420 x 200 mm - wheel connection 280/335/10 ET 0 - M22 x 1.5							
150 x 16	1,950	900	490 – 540	–	–	12,000	56.72.01.0920
150 x 16	2,050	1,000	490 – 540	–	–	12,000	56.72.01.0921
150 x 16	2,150	1,000	490 – 540	–	–	12,000	56.72.01.0922
150 x 16	2,200	1,100	490 – 540	–	–	12,000	56.72.01.0923
Steering axle: GSNSLOLL 12010 - axle load up to 12,000 kg (80 km/h)							
Brake SN4220 420 x 200 mm - wheel connection 280/335/10 ET 0 - M22 x 1.5							
150 x 16	1,950	800	490 – 540	–	–	12,000	56.72.01.0924
150 x 16	2,050	800	490 – 540	–	–	12,000	56.72.01.0925
150 x 16	2,150	900	490 – 540	–	–	12,000	56.72.01.0926
150 x 16	2,200	900	490 – 540	–	–	12,000	56.72.01.0927
Rigid axle: GSNSLU 12010 - axle load up to 12,000 kg (80 km/h)							
Brake SN4220 420 x 200 mm - wheel connection 280/335/10 ET 0 - M22 x 1.5							
150 x 16	1,950	900	490 – 540	–	–	12,000	56.72.01.0928
150 x 16	2,050	1,000	490 – 540	–	–	12,000	56.72.01.0929
150 x 16	2,150	1,000	490 – 540	–	–	12,000	56.72.01.0930
150 x 16	2,200	1,100	490 – 540	–	–	12,000	56.72.01.0931
Steering axle: GSNSLOLL 12010 - axle load up to 12,000 kg (80 km/h)							
Brake SN4220 420 x 200 mm - wheel connection 280/335/10 ET 0 - M22 x 1.5							
150 x 16	1,950	800	490 – 540	–	–	12,000	56.72.01.0932
150 x 16	2,050	800	490 – 540	–	–	12,000	56.72.01.0933
150 x 16	2,150	900	490 – 540	–	–	12,000	56.72.01.0934
150 x 16	2,200	900	490 – 540	–	–	12,000	56.72.01.0935

Further track widths, spring centres and HD versions up to 14 t axle load available on request.
Axle loads depending on the track/spring centre ratio and the tyres.
All suspension units are also available with axle type GS 14010.
Steering axles with steel steering housing: 13 t axle load.
Particularly recommended for application in tri-axle running gear.

More information: ECO Air tank, page 64 · ABS, page 72 · Air bags, page 74-75 · Axle lift devices, page 76

BPW TANDEM AXLE SUSPENSIONS. EXTREMELY ROBUST – FOR EVERY APPLICATION.

BPW bogie suspension can be universally used for many vehicle types such as tankers, loaders, tippers, transport trailers, etc. Due to the large equalisation between the axles of approx. 300 mm, the bogie suspension unit is very suitable for off-road application. At the same time, this suspension unit convinces with its excellent spring characteristics in on-road applications. Axles equipped with ABS and AGS can be used for speeds of up to 65 km/h.

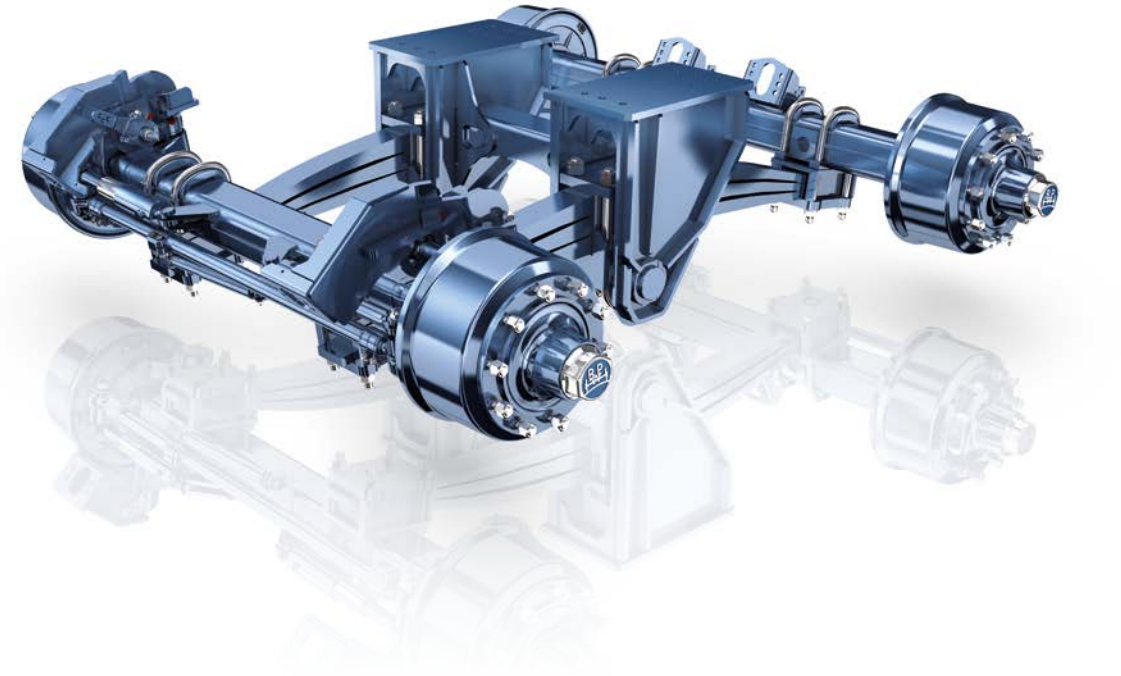

Your benefits at a glance:

- **Stable design**
- **Optimum adaptation to the ground contours due to the large pendulum radius**
- **Increased payload due to the reduced weight**
- **Low drag resistance due to the asymmetric springs and optimised traction point of the swinging bearing**
- **Optimised function of spring seat assembly due to the positive clamping design (GSBW 11010 with welded spring seat assembly)**
- **Available with complete brake system (option)**
- **Low height due to the installation of the axles above the springs (option)**
- **Central lubrication system (option)**
- **Preparation for tyre pressure control system RDS (option)**

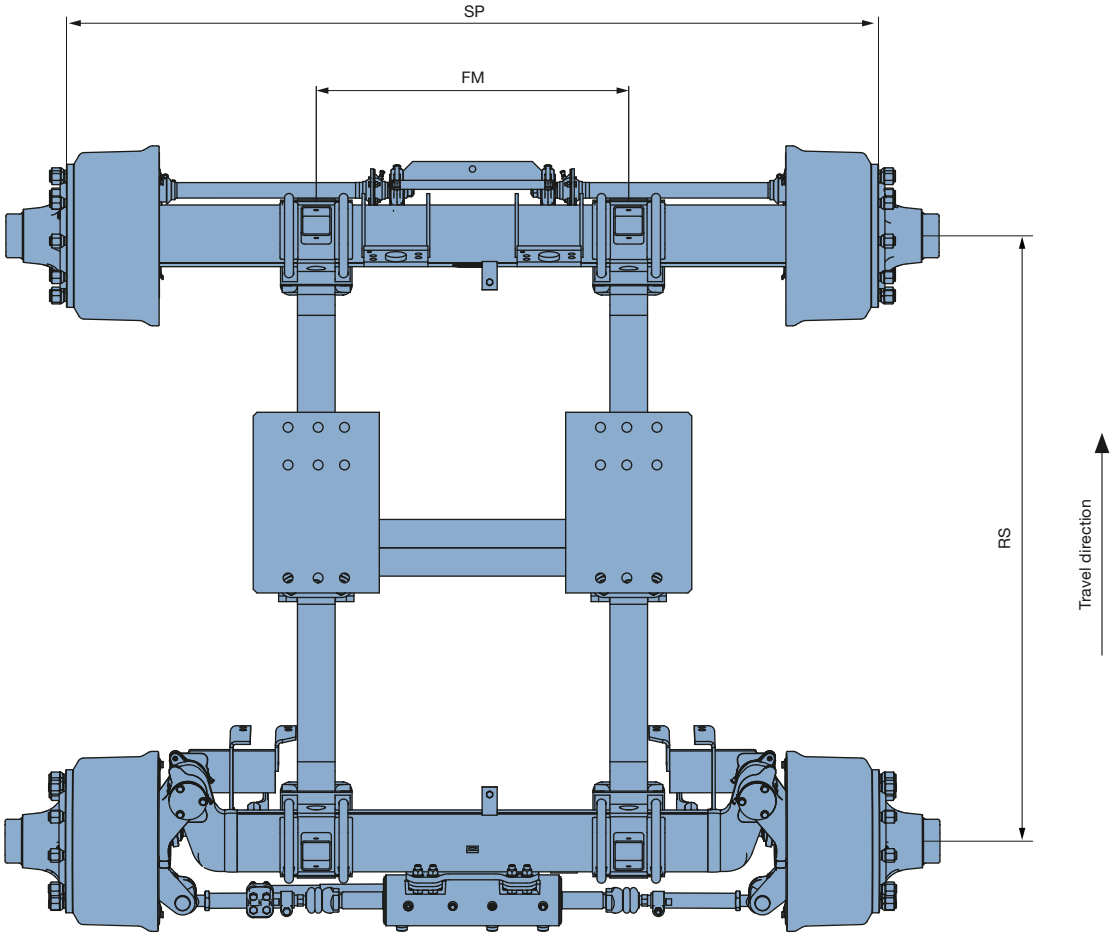

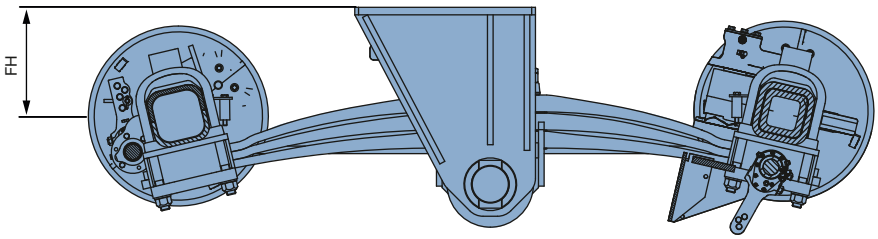

Side view

BPW TANDEM AXLE SUSPENSIONS.

Axle cross-section (mm)	Track width SP (mm)	Wheel base RS 1,450 (mm)	Wheel base RS 1,600 (mm)	Wheel base RS 1,900 (mm)	Ride height 1 (mm) uunladen	Ride height 2 (mm) unladen	Axle load (kg)		BPW code number
							40 km/h	60 km/h	
Rigid axle: GSBW 8008-3 - axle load up to 14,000 kg at 40 / 60 km/h									
Brake N4008-4 400 x 80 mm - wheel connection 220/275/8 ET 0 - M20 x 1.5									
100	1,950	–	•	–	454	245	14,000	14,000	56.70.05.xxxx
100	2,050	–	•	–	454	245	14,000	14,000	56.70.05.xxxx
100	2,150	–	•	–	454	245	14,000	14,000	56.70.05.xxxx
Steering axle: GSBWLA 8008-3 - axle load 14,000 kg at 40 / 60 km/h									
Brake N4008-4 400 x 80 mm - wheel connection 220/275/8 ET 0 - M20 x 1.5									
VA 100 / HA 120 x 15	1,950	–	•	–	454	245	14,000	14,000	56.70.05.xxxx
VA 100 / HA 120 x 15	2,050	–	•	–	454	245	14,000	14,000	56.70.05.xxxx
VA 100 / HA 120 x 15	2,150	–	•	–	454	245	14,000	14,000	56.70.05.xxxx
Rigid axle: GSBW 11010-1 - axle load up to 20,000 kg at 40 km/h									
Brake FL4112 410 x 120 mm - wheel connection 280/335/10 ET 0 - M22 x 1.5									
120 x 10 / 120 x 15	1,950	on request	•	•	454	260	20,000	18,000	56.88.05.xxxx
120 x 10 / 120 x 15	2,000	on request	•	•	454	260	20,000	18,000	56.88.05.xxxx
120 x 10 / 120 x 15	2,050	on request	•	•	454	260	20,000	18,000	56.88.05.xxxx
120 x 10 / 120 x 15	2,150	on request	•	•	454	260	20,000	18,000	56.88.05.xxxx
120 x 10 / 120 x1 5	2,225	on request	•	•	454	260	20,000	18,000	56.88.05.xxxx
Steering axle: GSBWLA 11010-1 - axle load up to 20,000 kg at 40 km/h									
Brake FL4112 410 x 120 mm - wheel connection 280/335/10 ET 0 - M22 x 1.5									
120 x 10 / 120 x 15	1,950	on request	•	•	454	260	20,000	18,000	56.88.05.xxxx
120 x 10 / 120 x 15	2,000	on request	•	•	454	260	20,000	18,000	56.88.05.xxxx
120 x 10 / 120 x 15	2,050	on request	•	•	454	260	20,000	18,000	56.88.05.xxxx
120 x 10 / 120 x 15	2,150	on request	•	•	454	260	20,000	18,000	56.88.05.xxxx
120 x 10 / 120 x 15	2,225	on request	•	•	454	260	20,000	18,000	56.88.05.xxxx

Version GSBW and GSBWLA 8008, also available with 10-hole wheel connection.
Version GSBW and GSBWLA 11010-1, also available with 8-hole wheel connection.
Ride height 1: Axles are installed below the spring to increase ground clearance.
Ride height 2: Axles are installed above the spring to lower the centre of gravity.
Heavy-duty version includes: reinforced suspension; trunnion block adjusted to higher load; steering axle as standard with cast steel steering housing.

MORE PAYLOAD

Axle cross-section (mm)	Track width SP (mm)	Wheel base RS 1,450 (mm)	Wheel base RS 1,600 (mm)	Wheel base RS 1,900 (mm)	Ride height 1 (mm) uunladen	Ride height 2 (mm) unladen	Axle load (kg)		BPW code number
							40 km/h	60 km/h	
Rigid axle: GSBW 12010 - axle load up to 24,000 kg at 40 km/h									
Brake FL4118 410 x 180 mm - wheel connection 280/335/10 ET 0 - M22 x 1.5									
150 x 10 / 150 x 16	1,950	–	•	•	487	351	24,000	22,000	56.72.05.xxxx
150 x 10 / 150 x 16	2,000	–	•	•	487	351	24,000	22,000	56.72.05.xxxx
150 x 10 / 150 x 16	2,050	–	•	•	487	351	24,000	22,000	56.72.05.xxxx
150 x 10 / 150 x 16	2,100	–	•	•	487	351	24,000	22,000	56.72.05.xxxx
150 x 10 / 150 x 16	2,150	–	•	•	487	351	24,000	22,000	56.72.05.xxxx
150 x 10 / 150 x 16	2,225	–	•	•	487	351	24,000	22,000	56.72.05.xxxx
Steering axle: GS(H)BWLL 12010 - up to 24,000 kg at 40 km/h									
Brake FL4118 410 x 180 mm - wheel connection 280/335/10 ET 0 - M22 x 1.5									
150 x 10 / 150 x 16	1,950	–	•	•	487	351	24,000	22,000	56.72.05.xxxx
150 x 10 / 150 x 16	2,000	–	•	•	487	351	24,000	22,000	56.72.05.xxxx
150 x 10 / 150 x 16	2,050	–	•	•	487	351	24,000	22,000	56.72.05.xxxx
150 x 10 / 150 x 16	2,100	–	•	•	487	351	24,000	22,000	56.72.05.xxxx
150 x 10 / 150 x 16	2,150	–	•	•	487	351	24,000	22,000	56.72.05.xxxx
150 x 10 / 150 x 16	2,225	–	•	•	487	351	24,000	22,000	56.72.05.xxxx
Heavy-duty steering axle: GS(H)BWLL 12010 - up to 26,000 kg at 40 km/h									
Brake FL4118 410 x 180 mm - wheel connection 280/335/10 ET 0 - M22 x 1.5									
150 x 16	1,950	–	•	•	496	323	26,000	24,000	56.72.05.xxxx
150 x 16	2,000	–	•	•	496	323	26,000	24,000	56.72.05.xxxx
150 x 16	2,050	–	•	•	496	323	26,000	24,000	56.72.05.xxxx
150 x 16	2,100	–	•	•	496	323	26,000	24,000	56.72.05.xxxx
150 x 16	2,150	–	•	•	496	323	26,000	24,000	56.72.05.xxxx
150 x 16	2,225	–	•	•	496	323	26,000	24,000	56.72.05.xxxx

More information: ECO Air tank, page 64 · Brake cylinders, page 70-71

BPW SPRING SUSPENSION UNITS.
FEELING AT HOME ON EVERY ROAD.

The newly developed BPW spring suspension (type VB…-V) is a running gear with mechanic suspension for on-road and easy off-road application. Due to the one-track mechanical system adopted from the tried and tested BPW air suspension, the running gear can now be installed in an even easier way.
As an alternative to standard parabolic springs, spring suspension is also available with multi-leaf springs.
The BPW VB running gear can be used universally for many vehicle types.

Your benefits at a glance:

- **Can be used with 1 – 3 axles**
- **Available with parabolic or multi-leaf springs**
- **Static axle equalisation through equalising beams**
- **Easy alignment of suspension units due to integrated track adjustment**
- **2- and 3-axle suspension units can be combined with a steering axle**

Spring suspension GSHVBLL-V

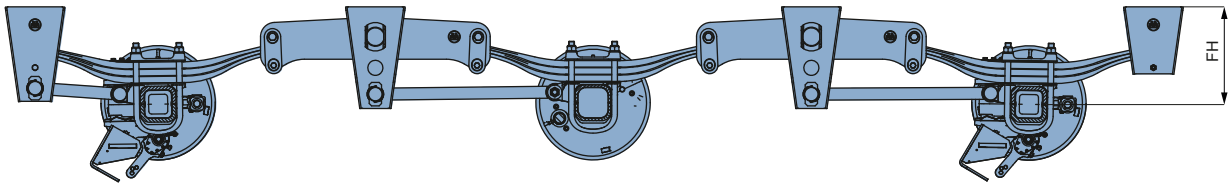

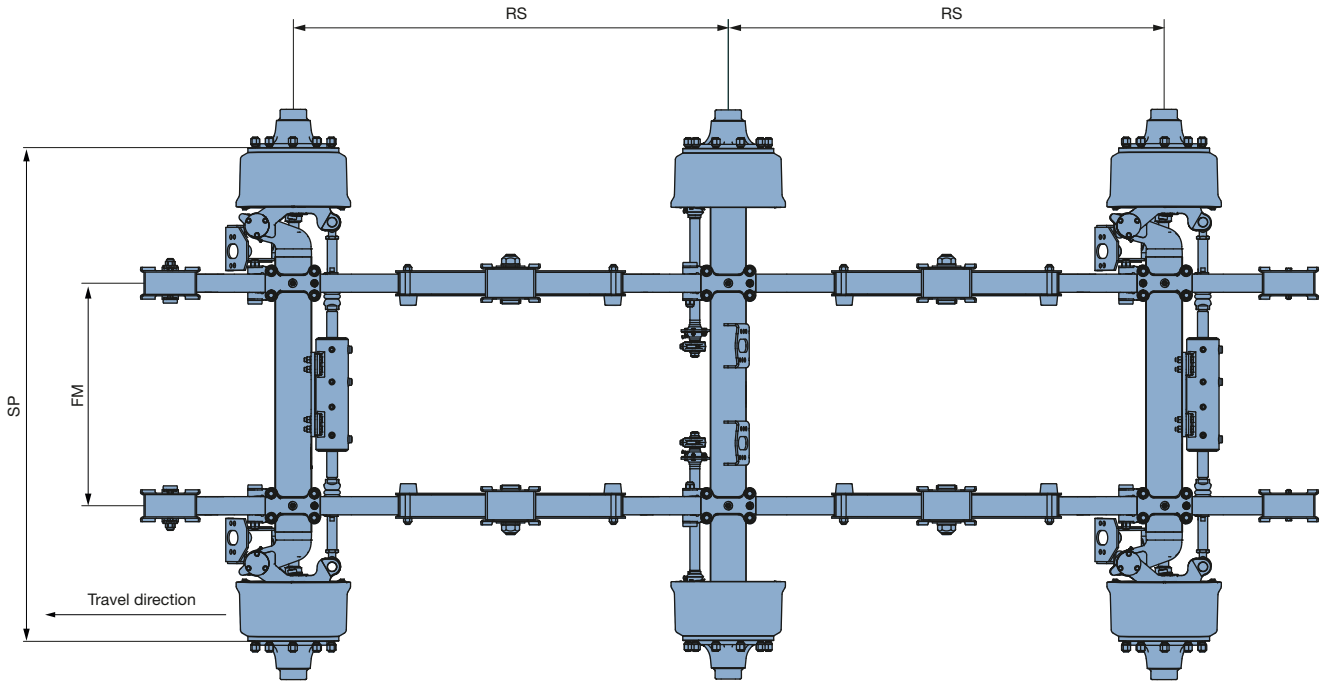

BPW heavy-duty spring suspension units

BPW's product range includes a heavy-duty VB HD suspension unit. This suspension unit equipped as standard with multi-leaf spring, is available with up to 32 t axle load (tandem axle suspension for 25 km/h) or 48 t (tridem axle suspension for 25 km/h).

BPW SPRING SUSPENSION UNITS.

Axle cross-section (mm)	Track width SP (mm)	Wheel base RS 1,360 (mm)	Wheel base RS 1,380 (mm)	Wheel base RS 1,600 (mm)	Wheel base RS 1,820 (mm)	Axle load (kg)			BPW code number
						Single axle	Tandem	Tridem	
Rigid axle: GSVB 8008-3 - 40 km/h									
Brake N4008-4 400 x 80 mm - wheel connection 220/275/8 ET 0 - M20 x 1.5									
100	1,850	•	–	–	–	8,000	16,000	–	56.70.04.xxxx
100	1,950	•	–	–	–	8,000	16,000	–	56.70.04.xxxx
100	2,000	•	–	–	–	8,000	16,000	–	56.70.04.xxxx
100	2,050	•	–	–	–	8,000	16,000	–	56.70.04.xxxx
Steering axle: GSVBLA 8008-3 - 40 km/h									
Brake N4008-4 400 x 80 mm - wheel connection 220/275/8 ET 0 - M20 x 1.5									
VA 100/HA 120 x 15	1,850	•	–	–	–	8,000	16,000	–	56.70.04.xxxx
VA 100/HA 120 x 15	1,950	•	–	–	–	8,000	16,000	–	56.70.04.xxxx
VA 100/HA 120 x 15	2,000	•	–	–	–	8,000	16,000	–	56.70.04.xxxx
VA 100/HA 120 x 15	2,050	•	–	–	–	8,000	16,000	–	56.70.04.xxxx
Rigid axle: GSVB 11010-1 - 40 km/h									
Brake FL4112 410 x 120 mm - wheel connection 280/335/10 ET 0 - M22 x 1.5									
120 x 10/120 x 15	1,950	•	•	•	•	9,000	18,000	27,000	56.88.04.xxxx
120 x 10/120 x 15	2,000	•	•	•	•	9,000	18,000	27,000	56.88.04.xxxx
120 x 10/120 x 15	2,050	•	•	•	•	9,000	18,000	27,000	56.88.04.xxxx
120 x 10/120 x 15	2,100	•	•	•	•	9,000	18,000	27,000	56.88.04.xxxx
120 x 10/120 x 15	2,150	•	•	•	•	9,000	18,000	27,000	56.88.04.xxxx
Steering axle: GSVBLA 11010-1 - 40 km/h									
Brake FL4112 410 x 120 mm - wheel connection 280/335/10 ET 0 - M22 x 1.5									
120 x 10/120 x 15	1,950	•	•	•	•	9,000	18,000	27,000	56.88.04.xxxx
120 x 10/120 x 15	2,000	•	•	•	•	9,000	18,000	27,000	56.88.04.xxxx
120 x 10/120 x 15	2,050	•	•	•	•	9,000	18,000	27,000	56.88.04.xxxx
120 x 10/120 x 15	2,100	•	•	•	•	9,000	18,000	27,000	56.88.04.xxxx
120 x 10/120 x 15	2,150	•	•	•	•	9,000	18,000	27,000	56.88.04.xxxx
Rigid axle: GSVB 12010 - 40 km/h									
Brake FL4118 410 x 180 mm - wheel connection 280/335/10 ET 0 - M22 x 1.5									
150 x 10/150 x 16	1,950	•	–	•	•	12,000	24,000	36,000	56.72.04.xxxx
150 x 10/150 x 16	2,000	•	–	•	•	12,000	24,000	36,000	56.72.04.xxxx
150 x 10/150 x 16	2,050	•	–	•	•	12,000	24,000	36,000	56.72.04.xxxx
150 x 10/150 x 16	2,100	•	–	•	•	12,000	24,000	36,000	56.72.04.xxxx
150 x 10/150 x 16	2,150	•	–	•	•	12,000	24,000	36,000	56.72.04.xxxx
150 x 10/150 x 16	2,225	•	–	•	•	12,000	24,000	36,000	56.72.04.xxxx

UP TO 36 t AXLE LOAD

Axle cross-section (mm)	Track width SP (mm)	Wheel base RS 1,360 (mm)	Wheel base RS 1,380 (mm)	Wheel base RS 1,600 (mm)	Wheel base RS 1,820 (mm)	Axle load (kg)			BPW code number
						Single axle	Tandem	Tridem	
Steering axle: GSVBLL 12010 - 40 km/h									
Brake FL4118 410 x 180 mm - wheel connection 280/335/10 ET 0 - M22 x 1.5									
150 x 10/150 x 16	1,950	•	–	•	•	12,000	24,000	36,000	56.72.04.xxxx
150 x 10/150 x 16	2,000	•	–	•	•	12,000	24,000	36,000	56.72.04.xxxx
150 x 10/150 x 16	2,050	•	–	•	•	12,000	24,000	36,000	56.72.04.xxxx
150 x 10/150 x 16	2,100	•	–	•	•	12,000	24,000	36,000	56.72.04.xxxx
150 x 10/150 x 16	2,150	•	–	•	•	12,000	24,000	36,000	56.72.04.xxxx
150 x 10/150 x 16	2,225	•	–	•	•	12,000	24,000	36,000	56.72.04.xxxx
Rigid axle: GSNVB 12010 - 80 km/h									
Brake SN4220 420 x 200 mm - wheel connection 280/335/10 ET 0 - M22 x 1.5									
150 x 16	1,950	•	–	•	•	12,000	24,000	36,000	56.72.04.xxxx
150 x 16	2,000	•	–	•	•	12,000	24,000	36,000	56.72.04.xxxx
150 x 16	2,050	•	–	•	•	12,000	24,000	36,000	56.72.04.xxxx
150 x 16	2,100	•	–	•	•	12,000	24,000	36,000	56.72.04.xxxx
150 x 16	2,150	•	–	•	•	12,000	24,000	36,000	56.72.04.xxxx
150 x 16	2,225	•	–	•	•	12,000	24,000	36,000	56.72.04.xxxx
Steering axle: GSNVBLL 12010 - 80 km/h									
Brake SN4220 420 x 200 mm - wheel connection 280/335/10 ET 0 - M22 x 1.5									
150 x 16	1,950	•	–	•	•	12,000	24,000	36,000	56.72.04.xxxx
150 x 16	2,000	•	–	•	•	12,000	24,000	36,000	56.72.04.xxxx
150 x 16	2,050	•	–	•	•	12,000	24,000	36,000	56.72.04.xxxx
150 x 16	2,100	•	–	•	•	12,000	24,000	36,000	56.72.04.xxxx
150 x 16	2,150	•	–	•	•	12,000	24,000	36,000	56.72.04.xxxx
150 x 16	2,225	•	–	•	•	12,000	24,000	36,000	56.72.04.xxxx

Version GSVB and GSVBLA 8008, also available with 10-hole wheel connection.
Version GSVB and GSVBLA 11010-1, also available with 8-hole wheel connection.
Further track widths available on request.
All suspension units are also available with axle type GS 14010.

Possible ride height of VB suspension units.

Version	Wheel base				
	1,360	1,380	1,600	1,600	1,820
GSVB 8008	292	–	–	–	–
GSVBLA 8008	292	–	–	–	–
GSVB 11010-1	398	290	323	398	390
GSVBLA 11010-1	398	290	323	398	390
GSVB 12010	413	–	–	413	405
GSVBLL 12010	413	–	–	413	405
GSNVB 12010	413	–	–	413	405
GSNBLL 12010	413	–	–	413	405

All dimensions in mm.

BPW PENDLE AXLE UNITS.
HIGH AXLE COMPENSATION FOR DIFFICULT TERRAIN.

BPW pendle axle units are notable for a very high level of equalisation on both sides. In addition, they ensure an even ride height even in different loading conditions. Pendle axle units are suitable for both off-road and on-road applications.

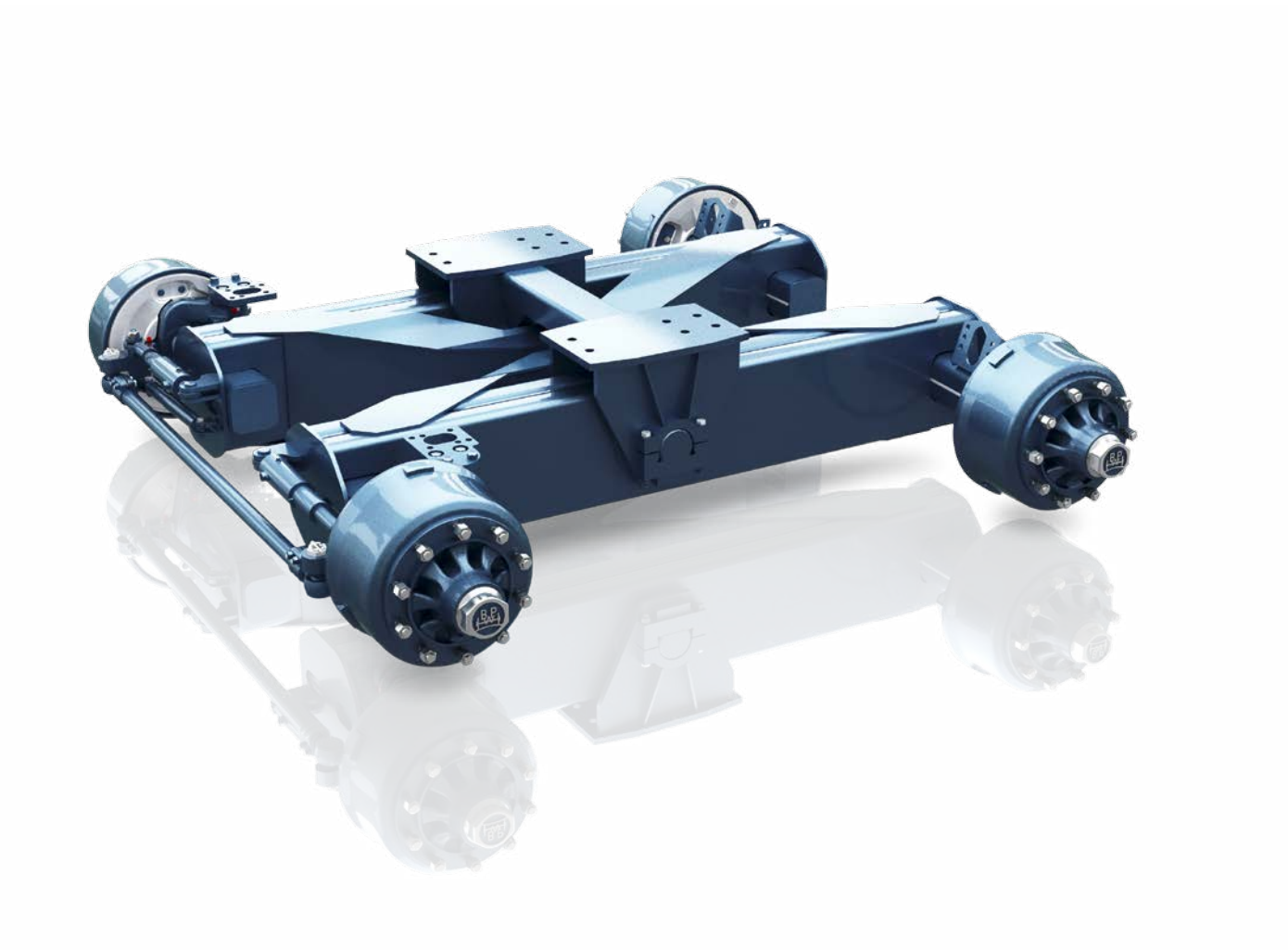

Your benefits at a glance:

- **High level of equalisation on both sides**
- **Constant ride height in any loading condition**
- **Asymmetric pendulum structure for optimal driving characteristics**
- **Heavy-duty sliding bearing bush for centre axle beam**
- **Preparation for tyre pressure control system RDS (option)**
- **Central lubrication system (option)**
- **Available with the complete brake system (option)**

BPW pendle axle unit GSSTPLS

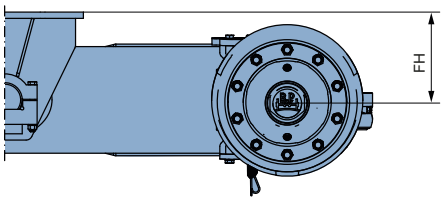

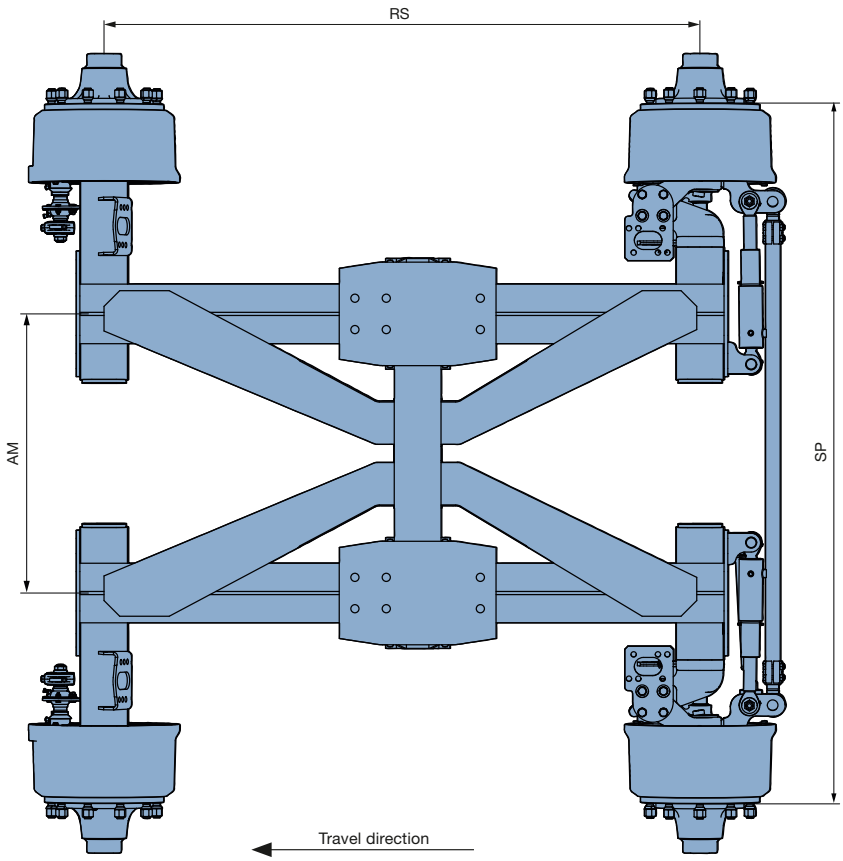

Track width SP (mm)	Support centre AM (mm)	Ride height FH (mm)	Wheel base RS (mm)	Axle load (kg) 40 km/h	BPW code number (Rigid axle)	BPW code number (Steering axle)
GSSTP(LS) 8008-3 - axle load up to 14,000 kg (40 km/h)						
Brake N4008-4 400 x 80 mm - wheel connection 220/275/8 ET 0 - M20 x 1.5						
1,950	1,100	280	1,350	14,000	56.70.06.0600	56.70.06.0602
2,050	1,100	280	1,350	14,000	56.70.06.0601	56.70.06.0603
GSSTP(LS) 11010-1 - axle load up to 20,000 kg (40 km/h)						
Brake FL4112 410 x 120 mm - wheel connection 280/335/10 ET 0 - M22 x 1.5						
1,950	930	280	1,300	20,000	56.88.06.0600	56.88.06.0605
2,000	1,050	280	1,300	20,000	56.88.06.0601	56.88.06.0606
2,050	1,050	280	1,300	20,000	56.88.06.0602	56.88.06.0607
2,150	890	280	1,550	20,000	56.88.06.0603	56.88.06.0608
2,225	890	280	1,550	20,000	56.88.06.0604	56.88.06.0609
GSSTP(LS) 12010 - axle load up to 26,000 kg (40 km/h)						
Brake FL4118 410 x 180 mm - wheel connection 280/335/10 ET 0 - M22 x 1.5						
2,050	890	280	1,550	24,000	56.72.06.0600	
2,150	1,100	280	1,900	24,000	56.72.06.0601	56.72.06.0605
2,225	890	280	1,900	24,000	56.72.06.0602	56.72.06.0606
2,050	900	280	1,900	26,000	–	56.72.06.0607
2,150	890	280	1,900	26,000	–	56.72.06.0608
2,225	890	280	1,900	26,000	–	56.72.06.0609

BPW SUSPENSION UNIT WITH BRAKE SYSTEM, SUSPENSION AND FRAME.

COMPLETELY FROM A SINGLE SOURCE.

In addition to axles and suspensions, BPW also offers completely equipped suspension units. This applies both to the brake system including brake cylinder, brake valves, ALB control and the complete piping or tubing of the components, and the installed control components of air and hydro-pneumatic suspension units. BPW is also in a position to equip its suspension units with the complete auxiliary frame. As a result, the vehicle manufacturer only has to install the vehicle frame on it, thereby considerably reducing the actual vehicle production time.

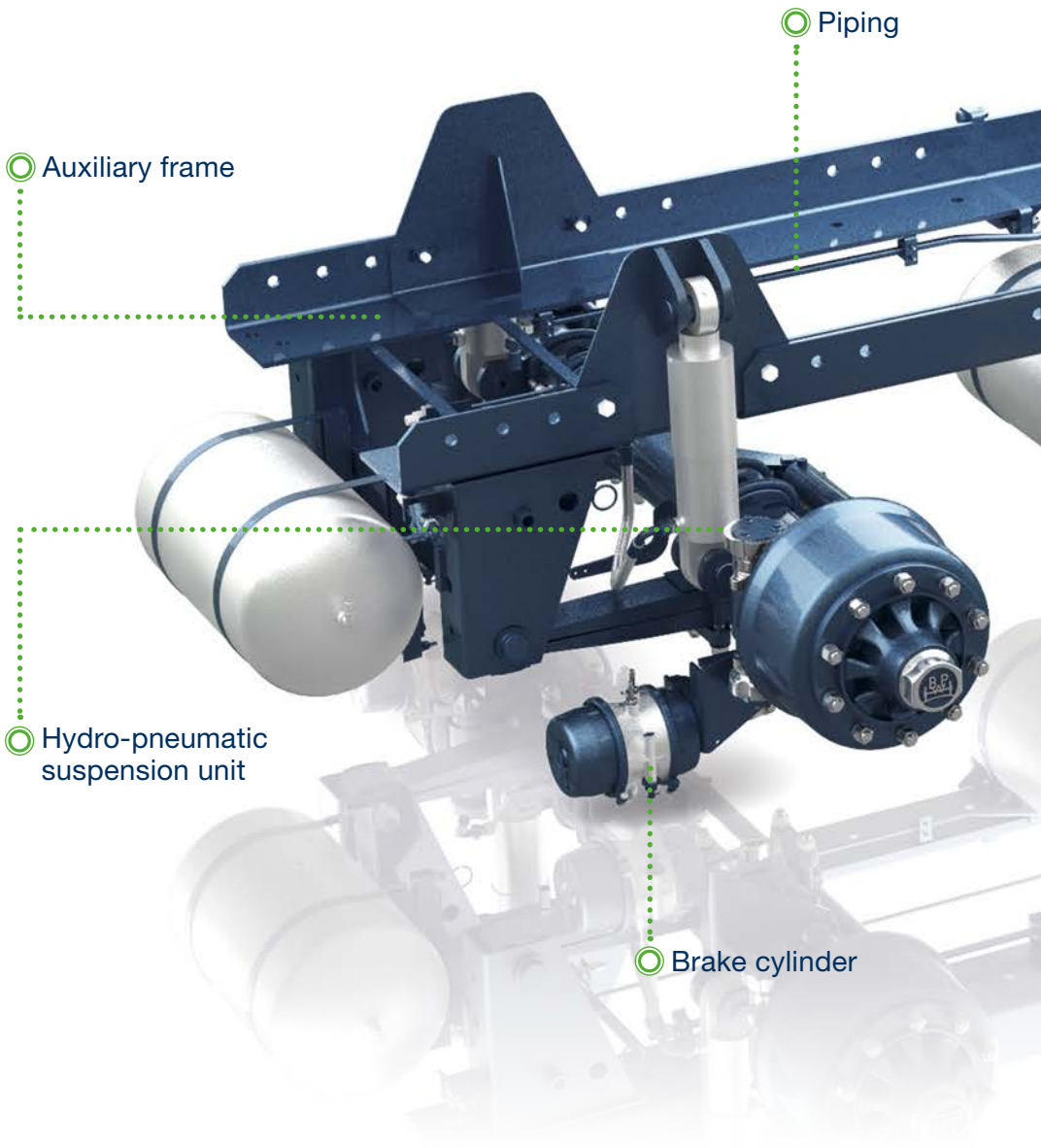

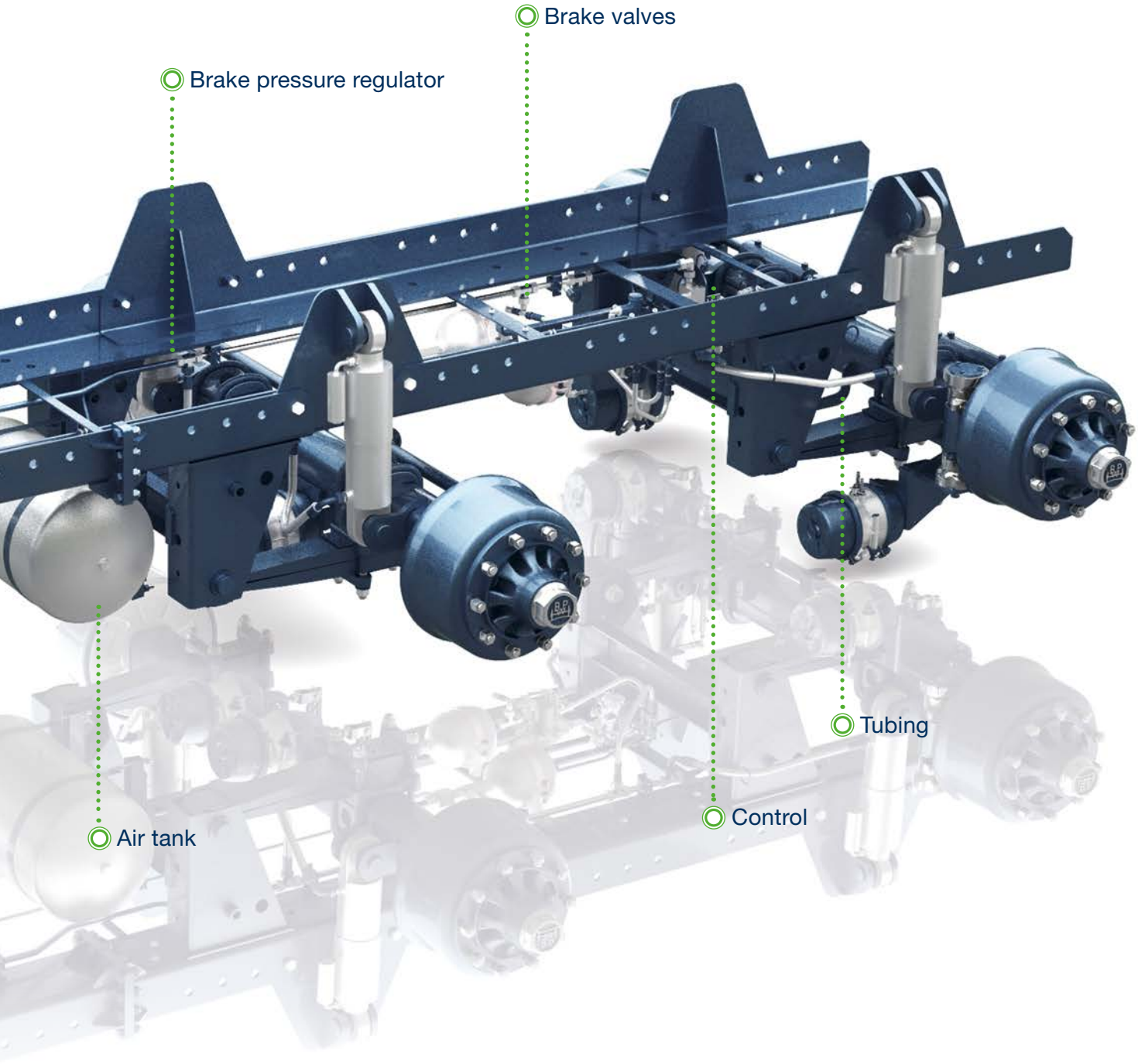
Brake valves
Brake pressure regulator
Tubing
Control
Air tank

CUSTOMER-SPECIFIC SOLUTIONS.

SPECIAL EXPERTISE ALSO FOR SPECIAL REQUIREMENTS.

More than 100 years of experience in the development and manufacture of axles and suspension units guarantee a high solution expertise in the development of individual running gear components. In addition to the series production of trailer axles, BPW jointly develops with the customers, for example, steered axles for field choppers, special axles for working machines, axles with adjustable track for field sprayers, axles for specific space-restricted installations etc.

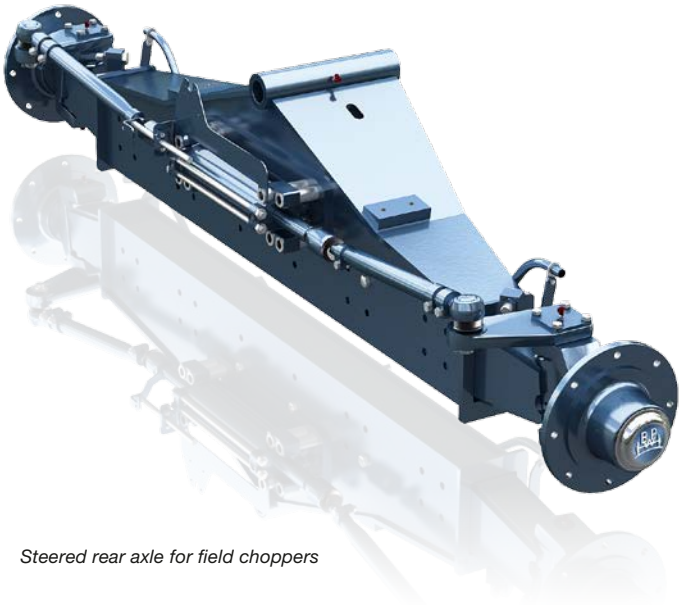

Steered rear axle for field choppers

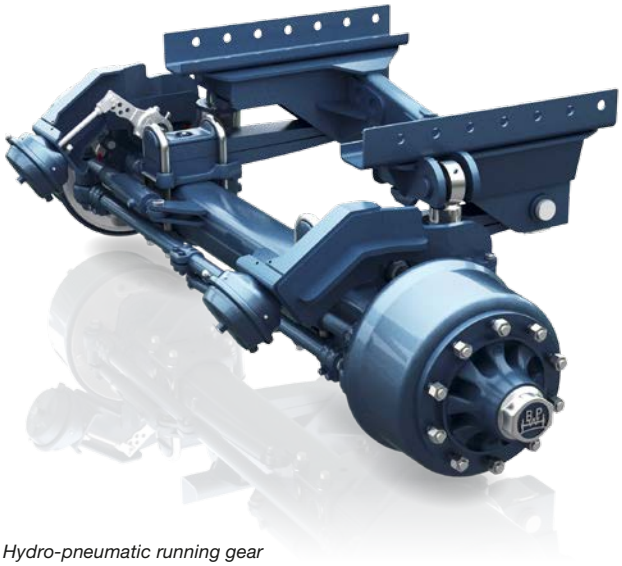

Hydro-pneumatic running gear with low ride height for manure tank

Steering axle with special frame connection for field sprayers

GASPARDO

S&Ü
Hydraulik und Maschinenbau GmbH

ECO AIR TANK.
LIGHT, ROBUST AND ECONOMICAL.

The ECO Air tank convinces not only with its light weight – it is also extremely robust. This is due to its corrosion-free material which substantially increases its lifetime. GFRP – also known as glass-fibre reinforced plastic – has numerous advantages. It particularly impresses with the weight reduction. The ECO Air tank, for instance, is up to 60 per cent lighter than its steel counterpart, thus allowing you to increase vehicle payload.

Specification

Temperature range:	from -40 °C to +80 °C
Operating pressure:	12.5 bar
Burst pressure:	30–37.5 bar
Certificate:	TÜV
European standard:	EN 286-1, EN 286-2
DIN:	in accordance with DIN 74281
Thread:	M22 x 1.5

Your benefits at a glance:

- **Weight reduction of up to 60 % compared to a conventional steel tank**
- **Higher payload**
- **Longer lifetime**
- **Corrosion-free**
- **Easy installation**
- **Modular construction**
- **Available 30 – 120 litres**
- **Recyclable**
- **Good stacking capacity**

Weight comparison GFRP – Alu – Steel

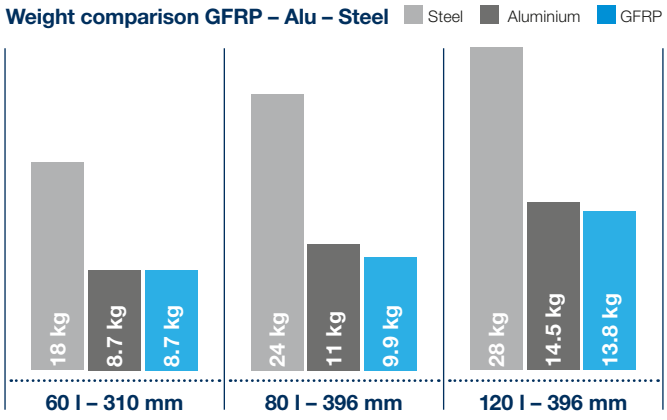

The **telematics solutions** from the BPW Group are as individual as your requirements. They show you **all the information from truck and trailer** that you need so that both driver and dispatcher have everything under control.
TControl Trailer transmits all the relevant pieces of information, such as the temperature in the trailer box, the condition of the brakes and the tyre pressure – including clear analyses. **TControl Truck** provides you with all the important data for the tow tractor, such as speedometer details, order management and driving performance. In combination, they represent an intelligent system, which is perfectly coordinated and works independent of the vehicle manufacturer. What does this mean for you: A flexible complete solution from a single source for even greater transparency and efficiency in controlling your truck fleet. **www.idem-gmbh.com I www.bpw.de**

POWERED BY
idem telematics

BPW · THE QUALITY FACTOR

BPW ACCESSORIES.

HOW TO MAKE YOUR BUSINESS RUN SMOOTHLY.

There are not many accessories you need to be perfectly prepared for the daily operation. However, we recommend you some products which can make maintenance and operation more efficient for you. With BPW accessories, driving will be simply better.

BPW jockey wheels and outriggers

BPW jockey wheels and outriggers are available in either square or round tubular design. There is a choice of spur and bevel gears for the crank handle mechanism with the required gearing. Appropriate wheel sizes are available, depending on the load to be supported. Mounting brackets for attachment to the vehicle are also available as optional extras.

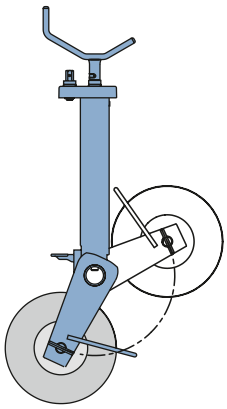

BPW trailer coupling type K 80

The trailer coupling type K 80 is only permitted for use in conjunction with 40 mm drawbar eyes complying with DIN 74054 and for trailers according to section 43 subsection 4 of the German Road Traffic Act (StVZO).

Specification	
Permissible axle load:	8,000 kg
Max. permissible speed:	40 km/h
Type:	K 80
Test mark:	F 4157
BPW code number:	05.206.10.01.0

CERTIFIED QUALITY

BPW special tools and measurement devices

Service in no time: BPW special tools make service works easier and faster. Every part is particularly adapted to the BPW running gears and designed for efficient service.

Consumables from BPW

Here again: driving with BPW is simply better. In long-term tests with different high-quality grease types, the special long-life rolling bearing grease ECO-Li^{Plus} has shown the best results. The BPW grease spray and ECO A&P spray are the top class consumables and ensure that everything runs smoothly in the long term.

SUITABLE BRAKE FOR EVERY APPLICATION.

SUITABLE DOCUMENT FOR EVERY REQUIREMENT.

No matter whether EC, ECE, StVZO, UTAC or CEMAGREF requirements must be met, BPW provides the corresponding certificates and test reports for all brake models. All models can be found on the BPW website at www.bpw.de/en/support/downloads/certificates.html

Certificates for BPW wheel brakes for trailers with power-operated brakes: Example

EC / ECE test reports for v ≥ 25 km/h									
Wheel brake type	Brake size (mm)	Test load (kg)	Permissible axle load (kg)	Certified tyre version		Dyn. radius (mm)		Test report-number	Type
						Certified	Permissible ≥		
N 3006-3	300 x 60	3,800	3,800	205 R 14 C	Twin	332	265.6	TDB 0403	EG
				8,5 R 17,5	Single	388	310.4	TDB 0410	
N 3108-3	310 x 80	6,000	6,000	7,5 R 15	Single	371	296.8	TDB 0364	EG
				8,25 R 20	Single	471	376.8		
N 4008-4	400 x 80	7,000	7,000	14/80 R 20	Single	543	434.4	TDB 0833	ECE
FL 4112	410 x 120	10,000	10,000	14,5 R 20	Single	527	421.6	TDB 0680	EG
FL 4118	410 x 180	11,000	11,000	385/65 R 22,5	Single	519	415.2	TDB 0624	EG
				700/50 R 22,5	Single	594	475.2		
				500/75 R 24	Single	653	522.4		
SN 4220	420 x 200	14,200	12,000	–	–	543	434.4	TDB 0137	ECE

Certificate according to the German Road Traffic Act (StVZO) for v ≤ 25/40 km/h								
Wheel brake type	Brake size (mm)	Test load (kg)	Permissible axle load (kg)	Permissible speed (km/h)		Unloaded radius (mm)		Test report-number
						Min.	Max.*	
N 3006-3	300 x 60	6,000	6,000	v ≤ 25	–	330	450	AL 180.0
N 3108-3	310 x 80	8,000	8,000	v ≤ 25	–	330	630	AL 192.0
N 4008-4	400 x 80	8,000	8,000	v ≤ 25	–	380	631	AL 318.1
FL 4112	410 x 120	8,000	8,000	v ≤ 25	–	650	950	AL 224.0
		13,000	13,000	v ≤ 25	–	420	650	AL 224.1
		10,500	10,500	–	v ≤ 40	420	650	AL 224.2
FL 4118	410 x 180	15,000	15,000	v ≤ 25	–	420	800	AL 210.0
		12,000	12,000	–	v ≤ 40	590	800	AL 210.1
		13,500	13,500	–	v ≤ 40	420	650	AL 210.2

* Other tyre radii are possible after mathematical checks.

Test reports according to UTAC (France) for v ≤ 40 km/h								
Wheel brake type	Brake size (mm)	Test load (kg)	Permissible axle load (kg)	Certified tyre version	Outer diameter Ø (mm)		Actuation	Test report-number
					Certified	Permissible ≥		
N 3006-3	300 x 60	3,800	3,800	12,5/80 - 15,3	897	717.6	Compressed air	07/02276
							Hydraulics	07/10272
N 3108-3	310 x 80	6,000	6,000	12,5/80 - 15,3	897	717.6	Compressed air	07/02277
							Hydraulics	07/10273
N 4008-4	400 x 80	7,000	7,000	600/50 - 22,5	1,172	937.6	Compressed air	08/06745
							Hydraulics	08/06746
FL 4112	410 x 120	10,500	10,500	600/50 - 22,5	1,172	937.6	Compressed air	07/02281
							Hydraulics	07/02282
FL 4118	410 x 180	12,000	12,000	600/50 - 22,5	1,172	937.6	Compressed air	07/02279
							Hydraulics	07/02280
			13,000	600/50 - 22,5	1,172	937.6	Compressed air	12/06557

Test reports according to CEMAGREF (France) for v ≤ 25 km/h						
Wheel brake type	Brake size (mm)	Test load (kg)	Permissible axle load (kg)	Unloaded radius (mm)		Test report-number
				Min.	Max.	
N 3006-3	300 x 60	6,000	6,000	330	450	13124
		8,000	8,000	320	450	14762
N 3108-3	310 x 80	8,000	8,000	330	630	12436
N 4008-4	400 x 80	12,000	12,000	380	890	15735
FL 4112	410 x 120	13,000	13,000	420	650	12713
				420	970	12870
FL 4118	410 x 180	15,000	15,000	420	800	12765
				420	970	14815

BPW wheel brakes for trailers with overrun brake: Example

Wheel brake type	Wheel brake size (mm)	Version	Test load PE per wheel brake (kg)			Unloaded radius (mm)		Test report-number
			Up to 25 km/h	Up to 40 km/h	Up to 60 km/h	Min.	Max.	
S 3006-7	300 x 60	RASK	3,000	2,000	–	330	480	F 1330
S 3006-7	300 x 60	RASK	–	–	1,500	310	440	F 1330
S 3006-7	300 x 60	RAZG	3,000	2,000	–	330	480	F 1331
S 3006-7	300 x 60	RAZG	–	–	1,500	310	440	F 1331
S 3008-RA	300 x 80	B drum hub	4,000	–	2,000	360	480	M 1556
S 3008-RA	300 x 80	B drum hub	–	3,000	–	360	420	M 1556
S 3008-RA	300 x 80	CI flange-mounted	4,000	–	–	480	580	M 1556
S 3008-RA	300 x 80	CI flange-mounted	–	2,500	–	480	620	M 1556
S 3008-RA	300 x 80	D flange-mounted	4,000	–	2,000	360	480	M 1556
S 3008-RA	300 x 80	D flange-mounted	–	3,000	–	360	420	M 1556

BPW BRAKE CYLINDER.
THE POWER STATION FOR YOUR BRAKE SYSTEM.

The optimum interplay of individual components is very important for a brake system. The brake cylinders have a decisive role because they have to ensure the perfectly controlled force transmission in the brake system. BPW develops and manufactures its own brake cylinders for drum brakes – another proof of our comprehensive expertise in matters concerning brakes.

Available versions of BPW brake cylinders

For axles with drum brakes	
Diaphragm cylinder	Spring-type cylinder
12"	
16"	16/24"
20"	20/30"
24"	24/30"
30"	30/30"
36"	

Diaphragm cylinder
They act as a service brake and are characterised by small dimensions and low weight.

Spring-type cylinder
They act both as a service brake as well as an auxiliary and parking brake.

Your benefits at a glance:

- **Constant high quality ensured by tests and permanent quality controls (FMEA, dimensional tests, release pressure tests, functional tests on the vehicle, vibration test, dirt tests, dynamic strength tests with more than 1 million braking cycles, hot and cold test (-40°C, 80°C), force output check**
- **Improved sealing due to the innovative flanging technique**
- **Optimum corrosion protection of housing components using different high-quality coating methods**
- **Optimum corrosion protection of spring due to double coating**
- **Inch and metric connections available**
- **Easy to install due to compressed air connection extension**
- **In drum brakes, there is no need for an external return spring between the slack adjuster and air cylinder bracket (precondition: mounting on BPW axles, round hole yoke end and lever length > 100 mm)**
- **New ECE certificates and test reports are available on the BPW website**

In many European countries a hydraulic brake system in vehicles with a maximum speed of 25 km/h is a standard. BPW axles generally allow installation and activation of wheel brake through a hydraulic brake cylinder.

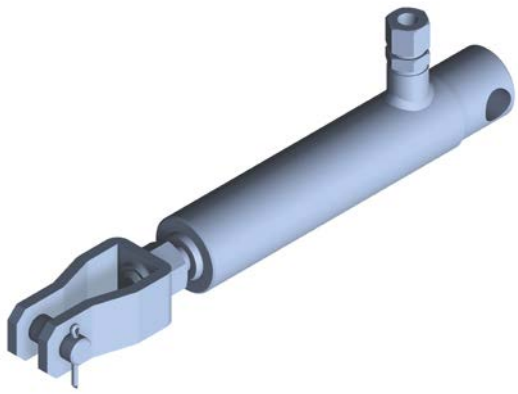

Hydraulic brake cylinder

The hydraulic brake cylinder is installed on the standard air cylinder bracket using an adapter. Hydraulic brake cylinders have a CEMAGREF approval in France.

Piston diameter (mm)	Outer diameter (mm)	Stroke (mm)	CEMAGREF test report-number	BPW code number
20	40	100	14956	05.444.50.11.0
25	40	100	15352	05.444.50.12.0
30	45	100	15351	05.666.52.11.0
35	50	110	9745	05.444.50.49.0

Your benefits at a glance

- **CEMAGREF-certified cylinders (required for the French market)**
- **Easy installation on the standard air cylinder bracket using special adapters**
- **BPW brake calculation for brake system**

BRAKES WITH ANTI-LOCK BRAKING SYSTEM.
AT THE HEART OF THE MATTER.

Anti-lock braking system (ABS) is used to reach short braking distance with the best possible driving stability and manoeuvrability – for tractors and trailers. Extreme braking does not cause wheels to lock and tyre wear is reduced.

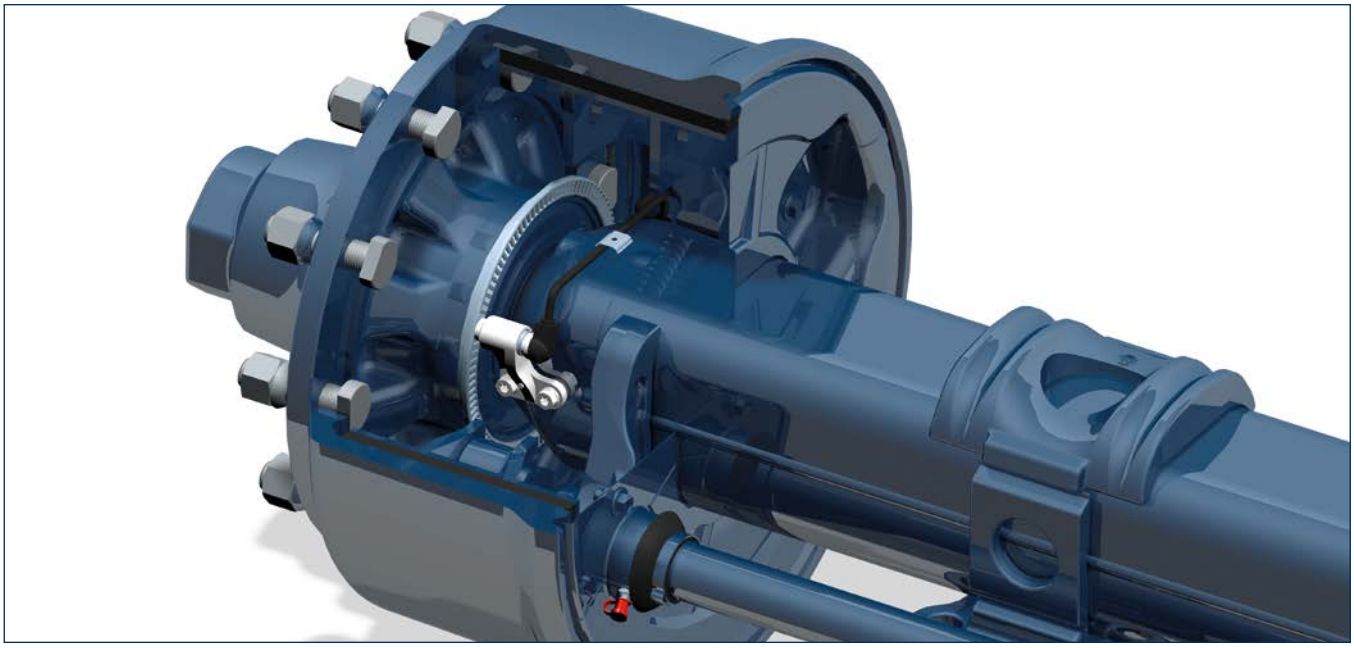

BPW axles and suspension units can be ordered with pre-assembled ABS sensors as an option, with only a few exceptions. Retrofitting with ABS (pole wheel plus ABS sensor) is usually possible without any problems.

In addition to the traditional application as anti-lock braking system (ABS), pole wheels and sensors enable the use of further applications such as distance measurement or electronic steering systems.

BPW SLACK ADJUSTER ECO MASTER.
DEFINE LIMITS FOR CYLINDER STROKE.

The required brake cylinder stroke increases as the brake lining thickness declines. The slack adjuster makes up for this change and keeps the brake cylinder stroke in the optimum zone of action at all times.

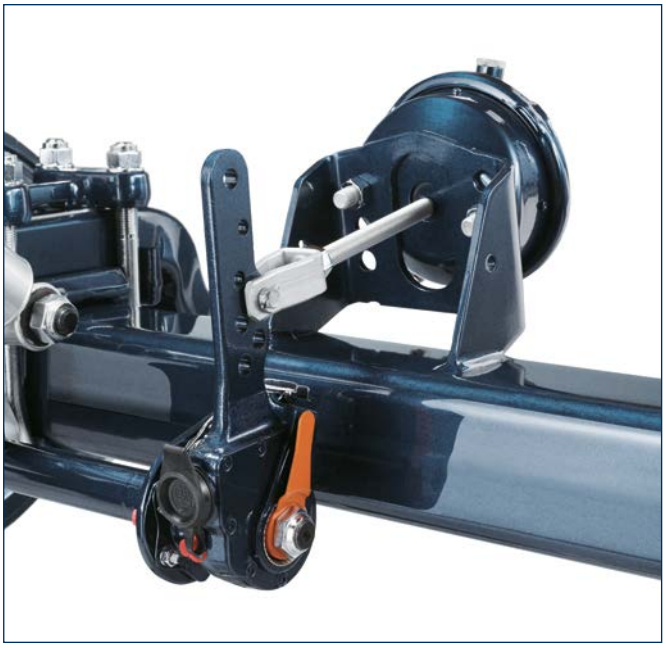

Functionality:
Brake linings and brake drums are wear parts. The brake cylinder stroke increases as the material thickness declines. This causes an increased rotation of the brake camshaft. This process is regulated automatically by the automatic adjustment mechanism of the ECO Master slack adjuster. Thus the brake cylinder is always kept in the same, optimum zone of action. In addition, the adjustment stroke ensures that even considering higher elasticity and thermal expansion of the adjacent components (e.g. brake drum), an adequate brake clearance is maintained.

Available versions:
Brake levers may have different shape and offset depending on the respective installation conditions.
– Automatic (AGS) and manual slack adjuster (GSK)
– Installed on BPW drum brake axle

Your benefits at a glance:

- **Functionality optimally adapted to the drum brake**
- **Constantly high braking effect during the entire service life of brake lining**
- **High wear resistance**
- **Optimum sealing against dirt and water**
- **Reduced service**
- **Easy and quick assembly and disassembly**
- **Four-hole lever can be used as a scale for EC brake calculation**
- **Clear view of brake lining wear indicator**
- **Forged brake lever provides optimum strength and allows lever end modifications**

BPW AIR BAGS.
WITHSTAND ANY PRESSURE.

BPW air bags are firmly rolled into the flange of the upper air bag cover 1 and vulcanised with the clamping plate at the bottom. The upper air bag cover 1 is either directly bolted to the bottom flange of the frame or a plate or mounting bracket is welded to the vehicle frame for fixing – depending on the air bag design.
The air bag cover is fixed to it using two M 12 self-locking nuts. The lower air spring piston 5 is bolted to the trailing arm using two M 16 self-locking nuts.

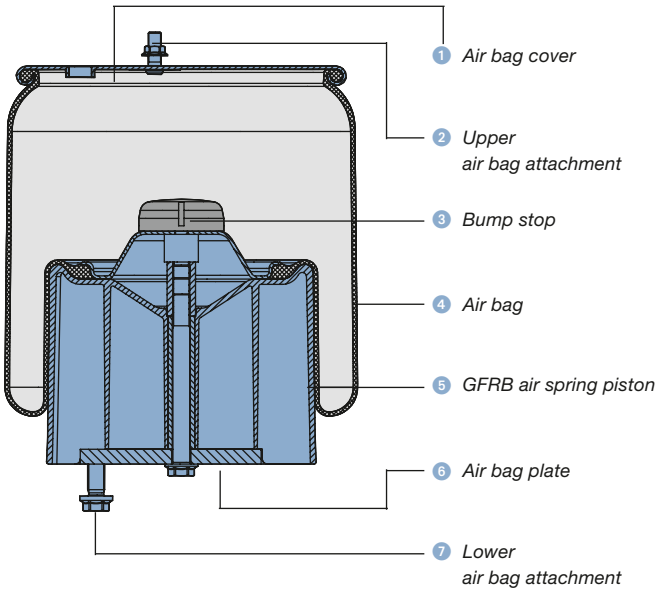

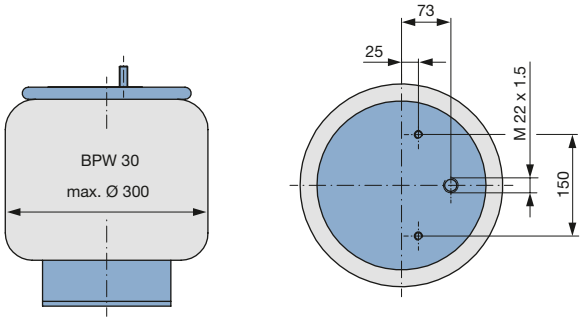

Versions a:

BPW 30	*For 200 mm stroke at axle centre*
BPW 30 K	*For 180 mm stroke at axle centre*
Diameter	*Max. 300 mm with approx. 5 bar*
Specific Air bag pressure	*0.00023 bar/N (with ride height)*
Air bag offset	*V = 0 mm, 20 mm, 60 mm (series)*

Stop
The upward suspension travel is restricted by a bump stop 3 inside the air bag 4 In certain operating conditions the downward travel must be restricted.

Air bag type 36 or 36-1
Vehicles with lifting and lowering mechanism and airbags type 36 or 36-1 require a stroke limitation.

Air bag type 30 K, 30 or 36 K
When air bags type 30 K, 30 or 36 K are used, stroke limitation is usually not required.

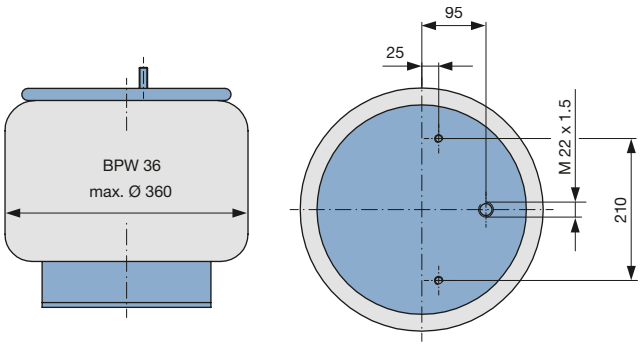

Ausführungen b:

BPW 36	*For 200 mm stroke at axle centre*
BPW 36-1	*For up to 340 mm stroke at axle centre*
BPW 36 K	*For 180 mm stroke at axle centre*
Diameter	*Max. 360 mm with approx. 5 bar*
Specific Air bag pressure	*0.000156 bar/N (with ride height)*
Air bag offset	*V = 45 mm, 80 mm (series)*

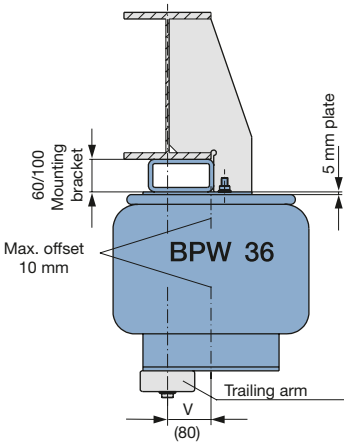

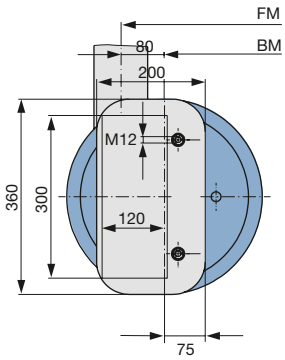

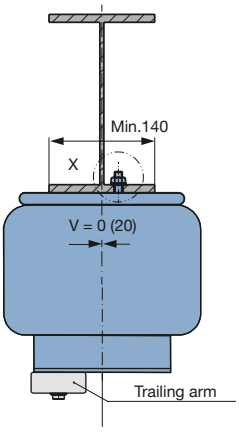

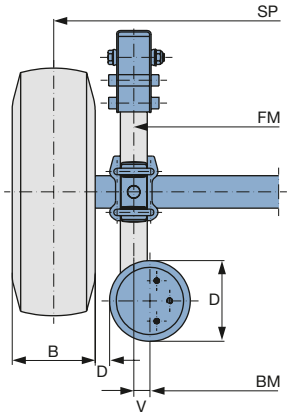

With bracket

The maximum lateral offset between the top and bottom attachment must not exceed 10 mm.
The top and bottom air bag attachments must not be installed with any rotational misalignment.

General

Air bags with offset generate bending forces which must be absorbed by welded gusset plates on the bottom flange of the frame. To define the construction and air bag offset, it has to be checked whether adequate clearance of the air bag is ensured.

SP	=	track on the ground
FM	=	spring centre
BM	=	air bag centre
D	=	air bag diameter (Ø 300 for BPW 30, 30 K) (Ø 360 for BPW 36, 36-1, 36 K)
V	=	air bag offset (60 mm or 80 mm, depending on the version)
B	=	tyre width (rim width must be considered)

Note

The clearance between the air bag and tyres or the brake cylinder with the maximum air bag diameter should be at least 30 mm.

BPW AXLE LIFT DEVICES.

LIFTING AXLES AND LOWERING COSTS.

BPW running gears with air suspension or hydro-pneumatic suspension can be provided with a lifting axle. Lifting axles protect the tyres and reduce fuel consumption.

An additional advantage is that the lifting axle can be used as traction assist. The temporary lifting of the first axle increases the bearing load on the tractor thus improving the traction of the vehicle on difficult terrain.

It has to be considered that the load is then distributed on the axle(s) standing on the ground. An overload of axles as a result of lifting one or several axles is basically avoided.

More information: BPW installation instruction for air suspension systems (BPW-EA-Luft…)

BPW SPARE PARTS.
NOTHING IS BETTER THAN THE ORIGINAL.

With more than 3,200 BPW service stations we make BPW genuine parts available in an optimum way to make it possible for you to rely on quality at any time. The identification of BPW components is based on an efficient system that reduces maintenance and downtime periods to a minimum. When necessary, we can deliver the genuine parts within 24 hours.

BPW genuine parts are permanently improved and give you the certainty that they are exactly attuned to your running gear and designed for maximum mileage. Ordering cannot be easier because the identification of genuine parts has a system. Every axle and every running gear is documented. Thus every component can be identified based on axle- and running gear-specific parameters. And you will receive the right replacement part in the fastest possible time. The parts list search facility in My BPW at **www.bpw.de/mybpw** offers you a continuously updated and comprehensive database for searching for specific parts at any time.

BPW genuine spare parts – your benefits at a glance

- From BPW's in-house production in certified OEM quality
- Long service life and safety due to the perfectly attuned components (compatible and tailor-made)
- Long service life
- Short repair time
- Exemplary spare part availability throughout Europe
- Safe storage due to the excellent surface finish (e. g KTL_{Zn}) or correct packaging
- More economical in the long run
- Easy maintenance and repair
- Low downtime
- BPW accepts product liability and processes smooth warranty claims

BPW ENGINEERING.

THE KNOW-HOW OF SOLUTION-ORIENTED THINKING.

BPW engineering is the creative force behind all our running gear solutions. This is backed by technical expertise of our R&D specialists. It is here that not only prototypes are brought to series-production readiness, but BPW also produces individual, made-to-measure components for running gear modules and complete running gear systems as part of development partnerships.

Our engineering work includes detailed driving and test facility trials, during which units such as axle beams, bearing units, brakes and air suspension are tested for function, load capacity, wear, durability and ease of maintenance. The result is the valuable know-how which you can also use. Our experts will be pleased to advise you – in a spirit of partnership and always with an eye on the application.

www.bpw.de/en/support/engineering.html

BPW SEMINARS.
PROFESSIONAL TRAINING BY EXPERTS FOR EXPERTS.

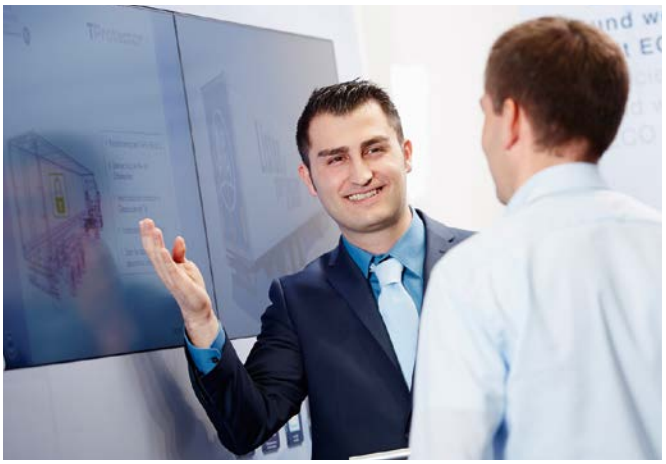

We would like to share our experience and our knowledge with you. No matter if you already know the BPW quality or are a newcomer: our seminars will present you our current know-how at first hand. They are informative, practical and provide many valuable tips. This holds true for vehicle manufacturers, part distributors and contracting companies and workshop employees – we can offer the right seminar for everyone. To avoid long travelling distances, we offer our seminars in all regions in Germany. If desired, we can develop individual, target group-oriented seminar programmes adapted to your field of activity.

www.bpw.de/en/support/seminars.html

BPW TECHNICAL DISTRIBUTION (AGRICULTURE).
EXPERTS FOR AGRICULTURAL VEHICLES.

The staff of Technical Distribution (Agriculture) are at your disposal as useful contacts when developing new vehicles and upgrades to existing ones, when employing alternative suspension systems in existing vehicle designs, as well as for any questions associated with the BPW range of axle and running gear systems. Our Technical Distribution department will also provide information about our latest products and developments, and will support you with the prototyping of BPW running gear systems in your vehicles.

Frank Rothe, Frank Eisenkrämer
BPW Bergische Achsen KG, Wiehl

THE BPW SERVICE NETWORK.
FOR QUICK SUPPORT ON THE GROUND.

An extensive network of workshops and part distributors is at your disposal all over Germany. After comprehensive BPW training courses and intensive communication with BPW it is best prepared for any questions regarding service. BPW's service partners in agriculture usually have all commonly used wear and repair parts in stock and their trained staff can provide rapid assistance on the ground.

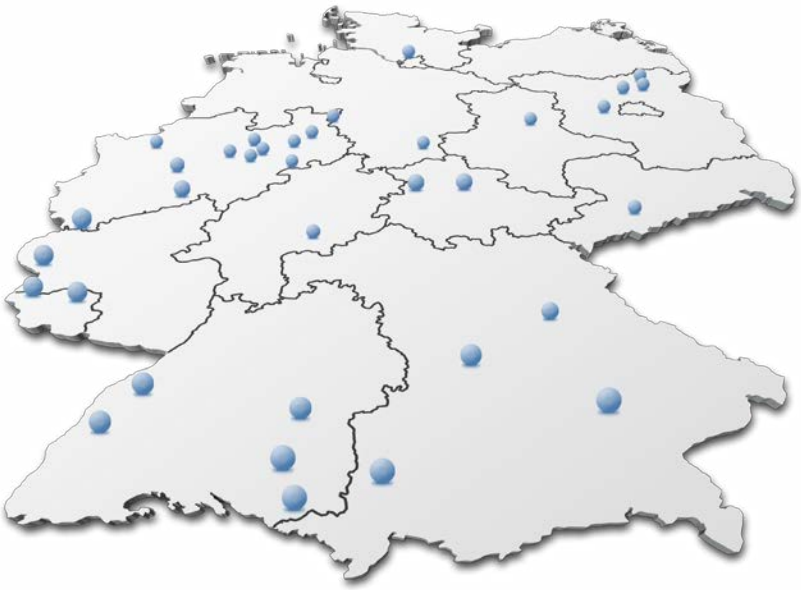

Available on the App Store

Google play

You can find your local BPW service partner on the BPW website at
www.bpw.de/service-network/index.php
or through the **"BPW Mobile app".**

Gain more mobility: with the free BPW apps. They will assist you with useful services en route by providing all information about BPW and its trailers. Therefore you can always have all the information you need at your fingertips. The BPW apps are available for smartphones with Apple iOS and Android operating systems.

www.bpw.de/en/support/bpw-apps.html

BPW WORLDWIDE.
ALWAYS CLOSE TO YOU.

Whether in Europe or overseas – if you are en route with BPW running gear systems, you will always have a reliable partner at your side – because our international BPW network will ensure that everything runs smoothly. In Europe and worldwide, you can rely on BPW.

Europe

Austria
Fahrzeugbedarf Kotz & Co.
• Guntramsdorf
www.fahrzeugbedarf.at

Belgium
BPW Benelux Sprl
• Herstal
www.bpw-benelux.be

Bulgaria
Stankoff Ltd.
• Sofia
www.stankoff-bg.com

Czech Republic
BPW spol. s.r.o.
• Brandys nad Labem
www.bpw.cz

Denmark
HBN-Teknik A/S
• Ringsted
www.hbn.dk

Transport-Teknik A/S
• Kolding
www.transport-teknik.dk

Estonia
Gokart AS
• Tallinn
www.gokart.ee

Finland
BPW Kraatz Oy
• Espoo
www.kraatz.fi

France
BPW France S.A.S.
• Paris
www.bpwfrance.fr

Germany
BPW Bergische Achsen KG
• Wiehl
www.bpw.de

BPW Fahrzeugtechnik
GmbH & Co. KG
• Paderborn
www.bpw-fahrzeugtechnik.de

F. Hesterberg & Söhne
GmbH & Co. KG
• Ennepetal
www.hesterberg.de

idem GmbH
• Munich
www.idem-gmbh.com

Great Britain
BPW Limited
• Leicester
www.bpw.co.uk

Hungary
Drechsel & Kollár Kft.
• Budapest
www.bpwtrade.hu

Ireland
Transpec Limited
• Dublin
www.bpw.co.uk

Italy
BPW Italia srl
• Verona
www.bpwitalia.it

Lithuania
UAB Ecobaltic
• Kaunas
www.ecobaltic.lt

Netherlands
BPW Benelux Sprl
• Eindhoven
www.bpw-benelux.nl

Norway
BPW Hofstad A/S
• Oslo
www.bpw.no

Poland
BPW Polska Sp. z o.o.
• Warsaw
www.bpw.pl

Romania
Auto Brand S.R.L.
• Bragadiru
www.autobrand.ro

Russia
BPW-Ost OOO
• Moscow
• Chelyabinsk
www.bpw-ost.ru

Spain
BPW Trapaco S.L.
• Madrid
www.bpw.es

Sweden
Fordonsmateriel AB
• Ängelholm
www.foma.se

Switzerland
Fahrzeugbedarf AG
• Horgen
www.fbh.ch

Turkey
BPW Otomotiv A.S.
• Istanbul

Ukraine
BPW-Ost OOO
• Kiev
www.bpw-ost.ru

Overseas

Australia
BPW Transpec
Pty Ltd
• Melbourne
• Sydney
• Darra
• Perth-Belmont
www.bpwtranspec.com.au

China
BPW Meizhou Axle Co., Ltd
• Meizhou City
• Shanghai
• Shenzen
• Shandong
• Fujian
www.bpw.cn

India
BPW Trailer Systems India
Private Limited
• Hanvarna
www.bpwindia.com

Japan
Nippon BPW Limited
• Yokohama
www.bpw.jp

Kazakhstan
BPW-Ost OOO
• Almaty
www.bpw-ost.ru

New Zealand
BPW Transport
Efficiency Ltd
• Auckland
www.tenz.co.nz

Singapore
BPW Asia Pte Ltd
• Jurong
www.bpw.sg

South Africa
BPW Axles (Pty) Ltd.
• Johannesburg
www.bpw.co.za

Thailand
BPW Asia Pte Ltd
• Rayong

www.bpw.de/en/contact.html

OUR PRODUCTS USED BY OUR CUSTOMERS.

All rights reserved.
BPW reserves the right to introduce technical modifications. Images similar. BPW does not accept liability for printing errors or inaccuracies. Reprinting and utilisation only with the approval of the publisher.

YOUR PARTNER ON THE PATH TO ECONOMIC VIABILITY!

BPW-Agrar 15401401e

BPW is a globally leading manufacturer of intelligent running gear systems for trailers and semi-trailers. As an international mobility and system partner, we offer a wide range of solutions for the transport industry from a single source, from axle to suspension and brake to user-friendly telematics applications. We thereby ensure outstanding transparency in loading and transport processes and facilitate efficient fleet management. Today, the well-established brand represents an international corporation with a wide product and service portfolio for the commercial vehicle industry. Offering running gear systems, telematics, lighting systems, composite solutions and trailer superstructures, BPW is the right system partner for automotive manufacturers.

BPW, the owner-operated company, consistently pursues one target: To always give you exactly the solution which will pay off. To this end, we focus our attention on uncompromising quality for high reliability and service life, weight and time-saving concepts for low operating and maintenance costs as well as personal customer service and a close-knit service network for quick and direct support. You can be sure that with your international mobility partner BPW, you always use the most efficient method.

BPW Bergische Achsen Kommanditgesellschaft
Postfach 12 80 · 51656 Wiehl, Germany · Phone +49 (0) 2262 78-0
info@bpw.de · **www.bpw.de**